## Scheme

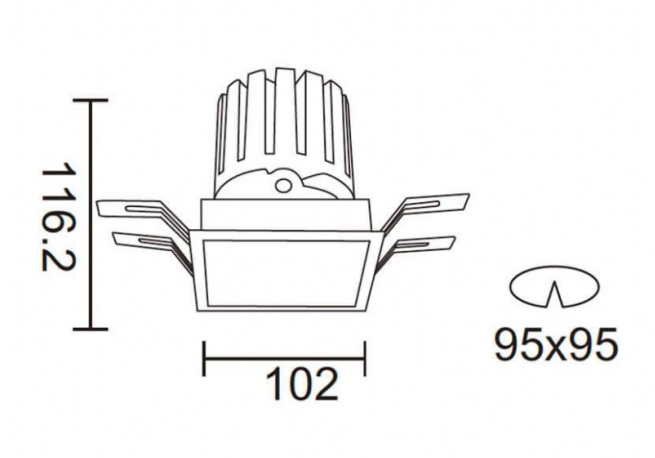


## Photometry

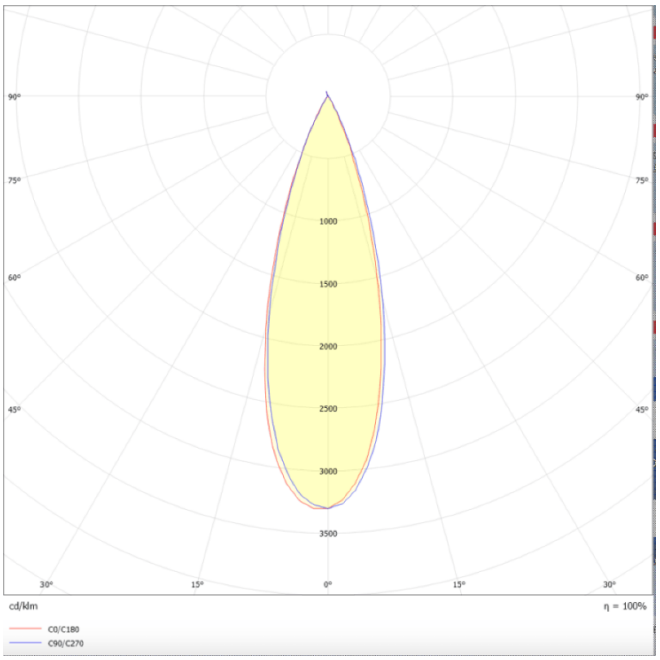


## PRO-DS

| | |
|---|---|
| **Item code** | **86.D026.3433.01** |
| **Product type** | **Indoor** |
| **Category** | **Downlights** |
| **Family** | **PRO-D** |
| **Subfamily** | **PRO-DS** |
| **Pictograms** | 220 240 V; XX°; CRI 90; CE; Driver INCL.; On Off; DALI; IP 20; 50000h L80B10 |

| | |
|---|---|
| **Product** | |
| **Real power (W)** | **28.7** |
| **Real luminous flux (Lm)** | **2336** |
| **Luminous efficiency (Lm/W)** | **81.400000000000006** |
| **Beam angle (º)** | **36** |
| **Life time (h)** | **50000 h L80B10** |
| **IP** | **20** |
| **Control gear** | **DALI** |
| **Colour temperature (K)** | **4000** |
| **Colour consistency (SDCM)** | **SDCM<3** |
| **CRI** | **90** |