OUTDOOR / FLOODLIGHTS / COURT / BRACKET

Item code 86.OF01.6461.02

Slip Fitter Mount

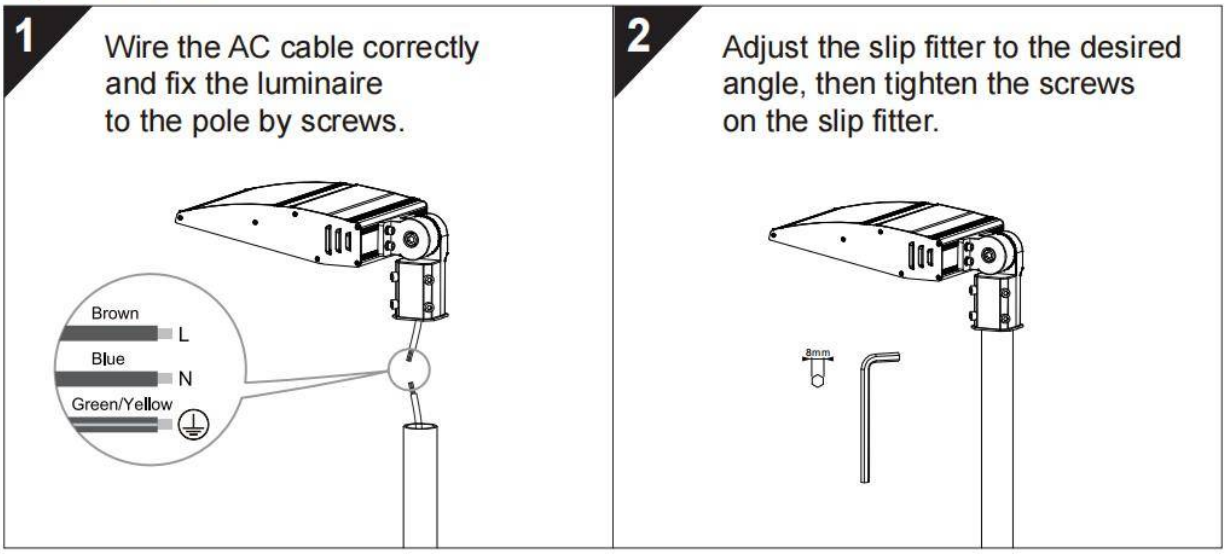

Bracket Mount

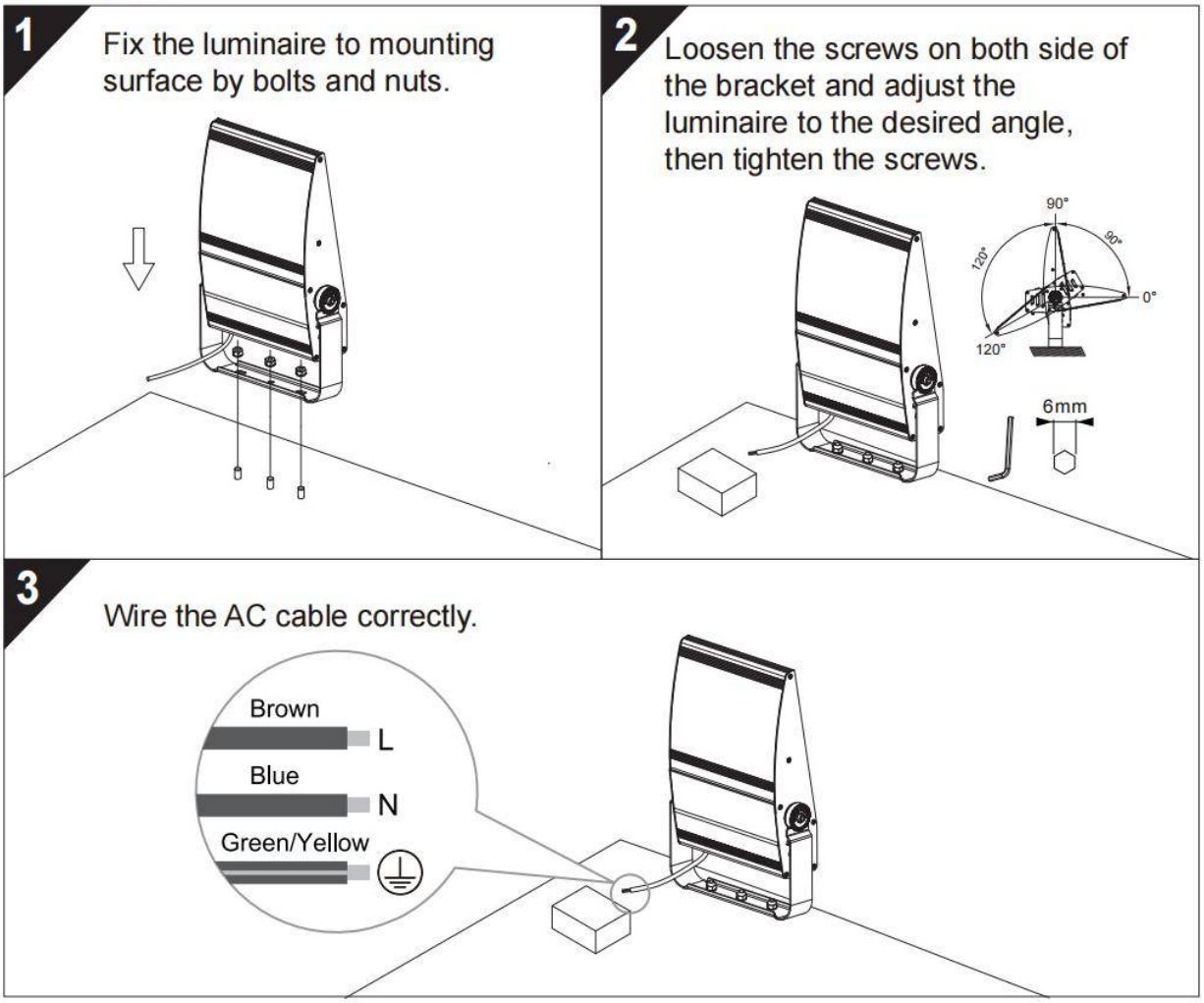

Trunnion Mount

1

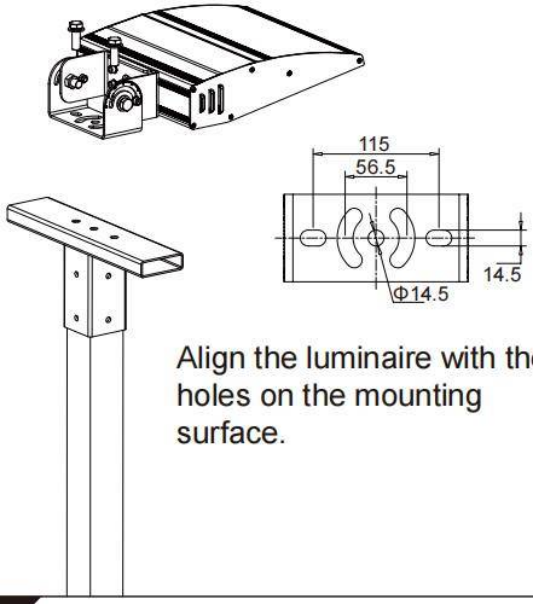

Align the luminaire with the holes on the mounting surface.

2

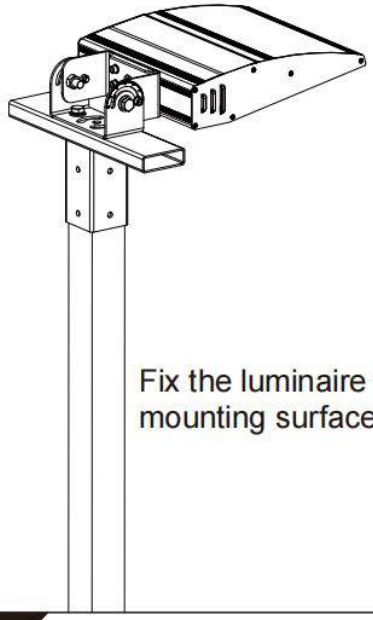

Fix the luminaire to the mounting surface by screws.

3

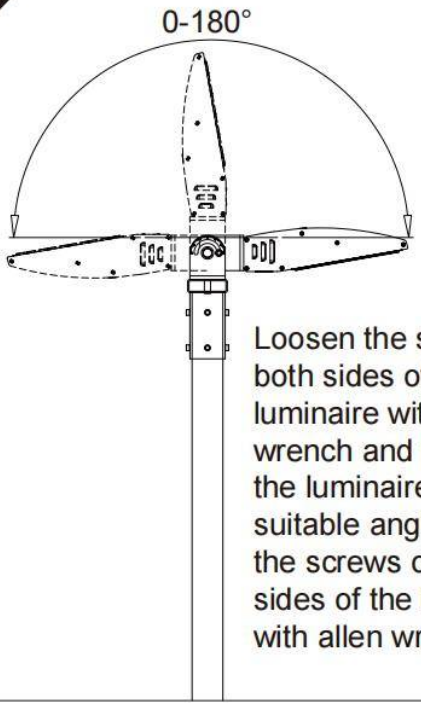

Loosen the screws on both sides of the luminaire with allen wrench and then adjust the luminaire to the suitable angle. Tighten the screws on both sides of the luminaire with allen wrench.

4
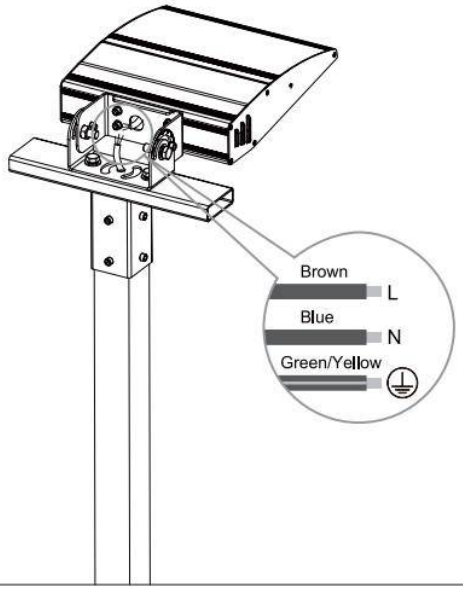
Wire the AC cable correctly.