- Installation and wiring of luminaire must be in accordance with all applicable local codes.
- Installation, inspection, and maintenance of luminaires should be performed by a qualified electrician.
- DO NOT make or alter any open holes in the luminaire. Do not modify the luminaire.
- DO NOT install damaged product.
- Make sure electrical power is OFF before and during installation and maintenance.
- Make sure the equipment is properly grounded.
- Make sure the supply voltage is same as the rated fixture voltage.

1

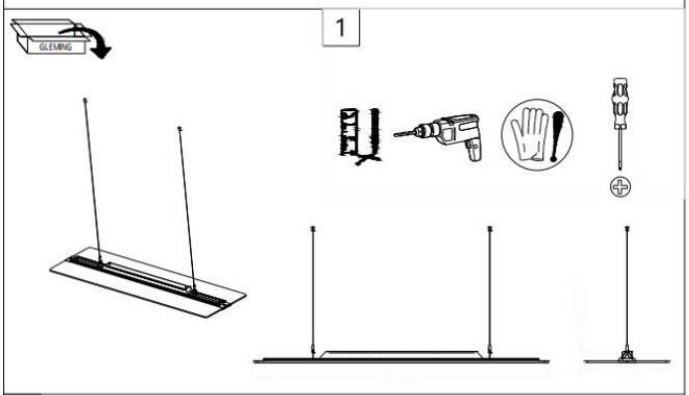

2

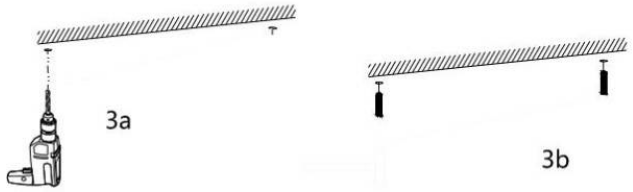

3

4

5

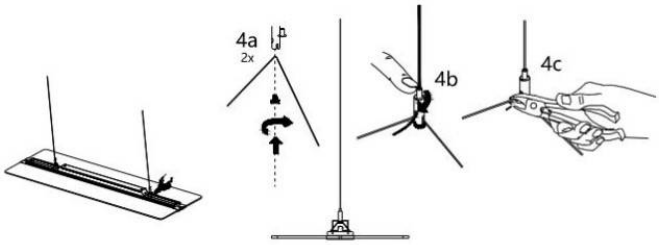

6

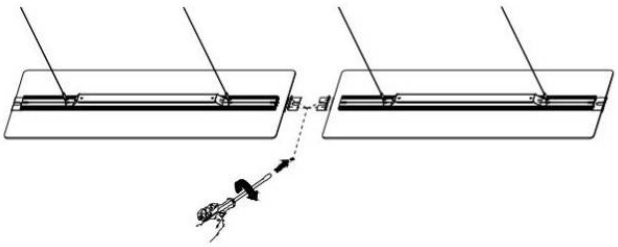

7

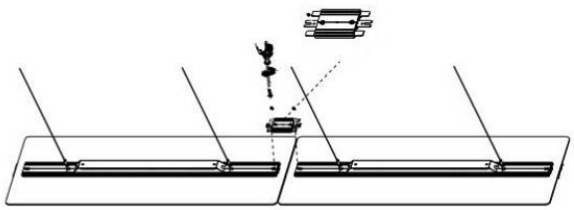

8

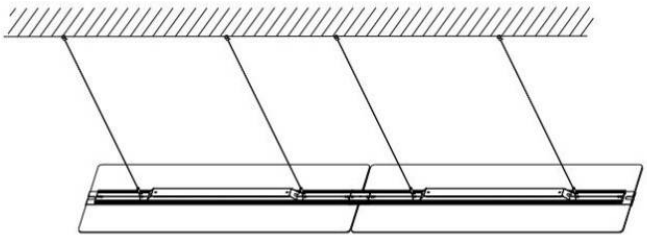

9

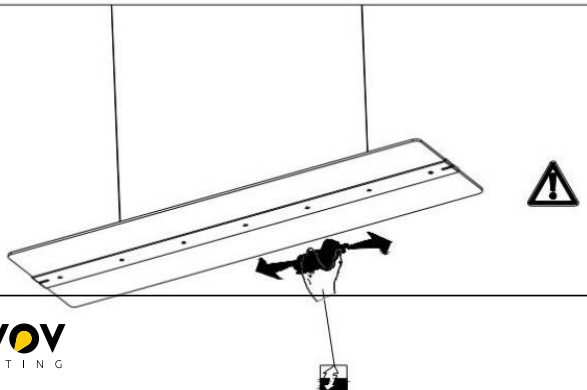

10

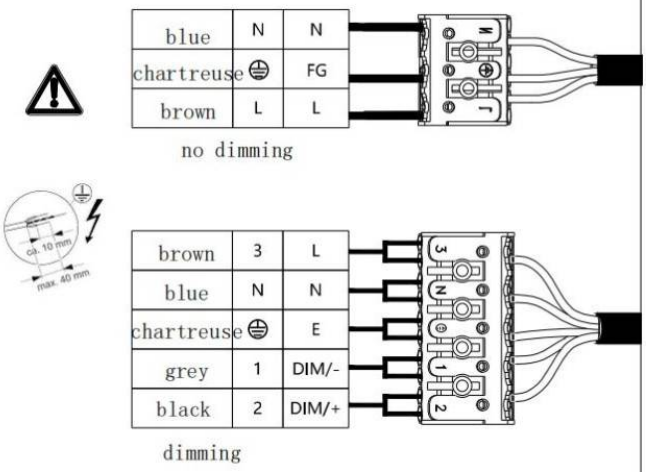

blue	N	N
chartreuse	⏚	FG
brown	L	L

no dimming

brown	3	L
blue	N	N
chartreuse	⏚	E
grey	1	DIM/-
black	2	DIM/+

dimming

11 Installation and commissioning of lamps and any modifications to lamps should only be carried out by qualified electricians

Execute. Before completing any operation on the device, it must be disconnected from the power supply

The connection of. Hot swapping may damage the luminaire!

Beware of electric shock!