

DARKO

Lavov Surface downlight from the family DARKO with a power of 20W and a beam angle of wall washer, with a total lumen output of2100Lm. with a CCT of 3000K.

Made in die cast aluminum. Input AC 220-230V 50Hz. DALI 2 control.

Item code	**85.DOW.20P3.01.AHFE**
Product type	**Outdoor**
Category	**Surface Downlights**
Family	**DARKO**
Subfamily	**DARKO**
Pictograms	CRI 90 · CE · IP 65 · DALI

Dimensions	
Product dimensions (mm)	**φ160*H275mm**

Scheme

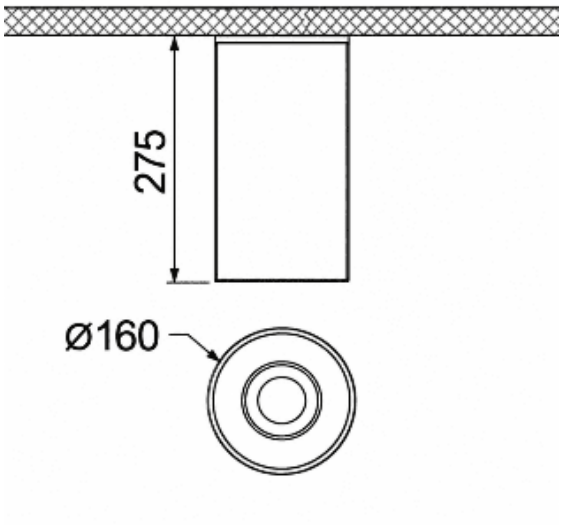

Product	
Real power (W)	**20**
Real luminous flux (Lm)	**2100**
Luminous efficiency (Lm/W)	**105**
Beam angle (º)	**Wall washer 60 x 40**
Life time (h)	**50000h L80 B10**
IP	**65**
Electrical class insulation	**Class II**
Colour	**White/Black/ Special RAL on request**
Driver	**Included – Integrated**
Control gear	**DALI 2**
Light source	**LED**
Type of LED	**COB**
Colour temperature (K)	**3000K**
Colour consistency (SDCM)	**SDCM2**
CRI	**90**