## BATH-D

Lavov Downlights from the family BATH-D ,power 9 W and CRI 80 with an optic 20 degrees made in Die Cast Aluminum finished in White with a real lumen output of 720lm and an efficiency of 80lm/W. DALI driver.

| | |
|---|---|
| **Item code** | **86.D002.1413.01** |
| **Product type** | **Indoor** |
| **Category** | **Downlights** |
| **Family** | **BATH-D** |
| **Pictograms** | 220 240 V · CRI 80 · CE · Driver INCL. · On Off · DALI · 50000h L80B10 |

## Scheme

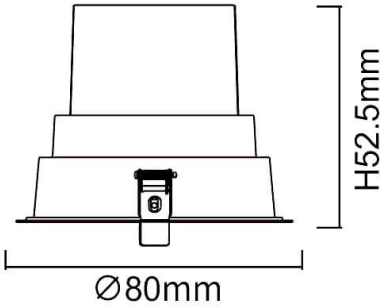


| | |
|---|---|
| **Product** | |
| **Real power (W)** | **9** |
| **Real luminous flux (Lm)** | **720** |
| **Luminous efficiency (Lm/W)** | **80** |
| **Beam angle (º)** | **20** |
| **Life time (h)** | **50000 h L80B10** |
| **IP** | **65** |
| **Electrical class insulation** | **Clas II** |
| **Colour** | **White** |
| **Control gear included** | **Yes** |
| **Control gear** | **DALI** |
| **Flicker Free** | **Yes** |
| **Light source** | **LED** |
| **Type of LED** | **COB** |
| **Colour temperature (K)** | **4000** |
| **Colour consistency (SDCM)** | **SDCM<3** |
| **CRI** | **80** |