COMBO Accessories

Lavov Combo trim Round Adjustable Decorative Round; with the following finishes: White trim & white reflector made in Die Cast Aluminum.

Item code	**86.D008.1112.01**
Product type	**Indoor**
Category	**Downlights**
Family	**COMBO**
Subfamily	**COMBO Accessories**
Pictograms	

Scheme

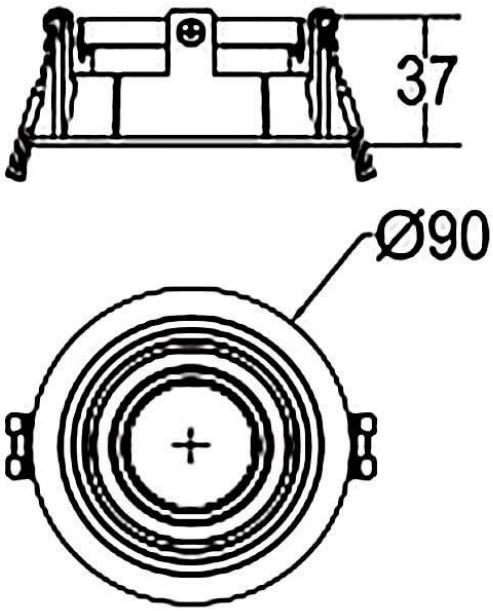

Product	
Life time (h)	**50000 h L80B10**
Colour	**White trim & white reflector**