D-TUBE2

Lavov Downlights from the family D-TUBE2 ,power 70 W and CRI 80 with an optic 12 degrees made in Die Cast Aluminum finished in White with a real lumen output of 6140lm and an efficiency of 87,71lm/W. ON/OFF driver.

Item code	**86.D011.3411.01**
Product type	**Indoor**
Category	**Downlights**
Family	**D-TUBE**
Subfamily	**D-TUBE2**
Pictograms	

Scheme

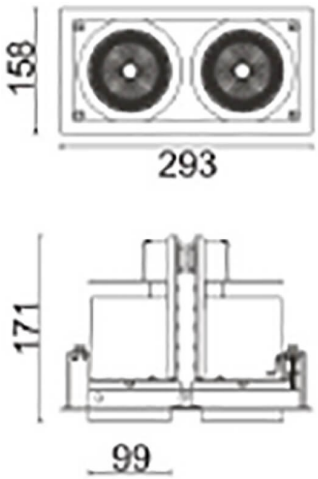

Product	
Real power (W)	**70**
Real luminous flux (Lm)	**6140**
Luminous efficiency (Lm/W)	**87.714285714286007**
Beam angle (º)	**12**
Life time (h)	**50000 h L80B10**
IP	**20**
Electrical class insulation	**Clas II**
Colour	**White**
Control gear included	**Yes**
Control gear	**ON/OFF**
Flicker Free	**Yes**
Light source	**LED**
Type of LED	**COB**
Colour temperature (K)	**4000**
Colour consistency (SDCM)	**SDCM<3**
CRI	**80**