Star

Lavov downlight from the family STAR with a power of 4W and an optics 45 degrees . CCT 3000K. With a total lumen output of 280lm and a luminous efficiency of 70lm/W.DALI driver. Made in die cast aluminum and finished in White color. UGR19.

Item code	**86.D029.2333.01**
Product type	**Indoor**
Category	**Downlights**
Family	**STAR**
Subfamily	**Star**
Pictograms	220 240 V · CRI 90 · CE · Driver INCL. · On Off · DALI · IP 20 · 50000h L80B10

Scheme

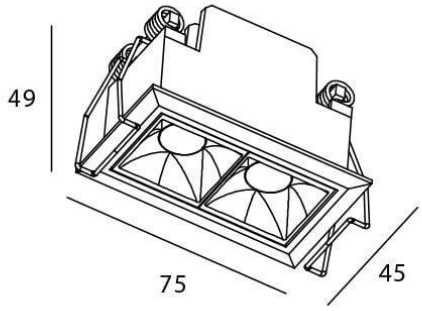

Product	
Real power (W)	**4**
Real luminous flux (Lm)	**280**
Luminous efficiency (Lm/W)	**70**
Beam angle (º)	**45**
Life time (h)	**50000 h L80B10**
IP	**20**
Electrical class insulation	**Clas II**
Colour	**White**
U. G. R	**UGR<19**
Control gear included	**Yes**
Control gear	**DALI**
Flicker Free	**Yes**
Light source	**LED**
Type of LED	**COB**
Colour temperature (K)	**3000**
Colour consistency (SDCM)	**SDCM<3**
CRI	**90**
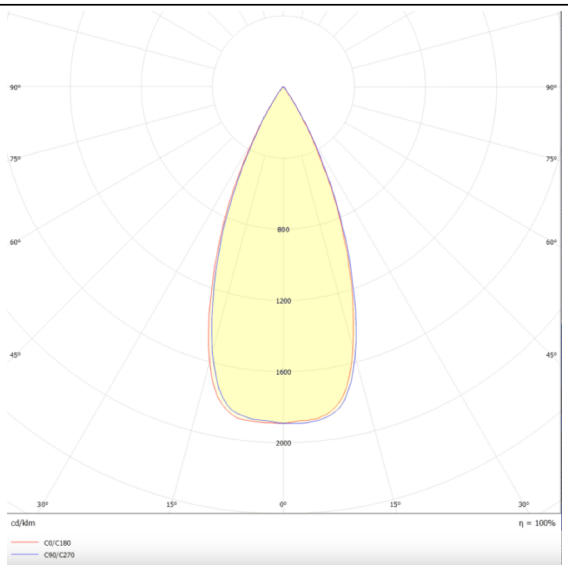
Photometry