Star-A

Lavov Downlights from the family Star-A ,power 10 W and CRI 90 with an optic 15 degrees made in Die Cast Aluminum finished in Black with a real lumen output of 540lm and an efficiency of 54lm/W. DALI driver.

Item code	**86.D031.3313.02**
Product type	**Indoor**
Category	**Downlights**
Family	**STAR**
Subfamily	**Star-A**
Pictograms	220 240 V · CRI 90 · CE · Driver INCL. · On Off · DALI · IP 20 · 50000h L80B10

Scheme

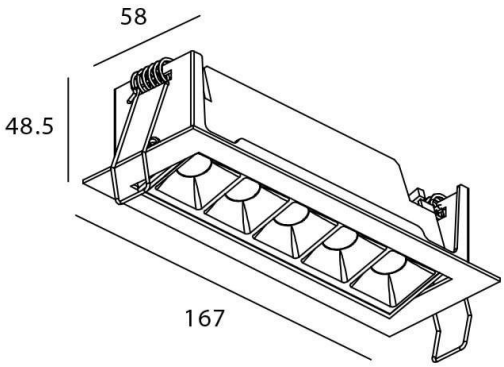

Product	
Real power (W)	**10**
Real luminous flux (Lm)	**540**
Luminous efficiency (Lm/W)	**54**
Beam angle (º)	**15**
Life time (h)	**50000 h L80B10**
IP	**20**
Electrical class insulation	**Clas II**
Colour	**Black**
U. G. R	**<19**
Control gear included	**Yes**
Control gear	**DALI**
Flicker Free	**Yes**
Light source	**LED**
Type of LED	**COB**
Colour temperature (K)	**3000**
Colour consistency (SDCM)	**SDCM<3**
CRI	**90**
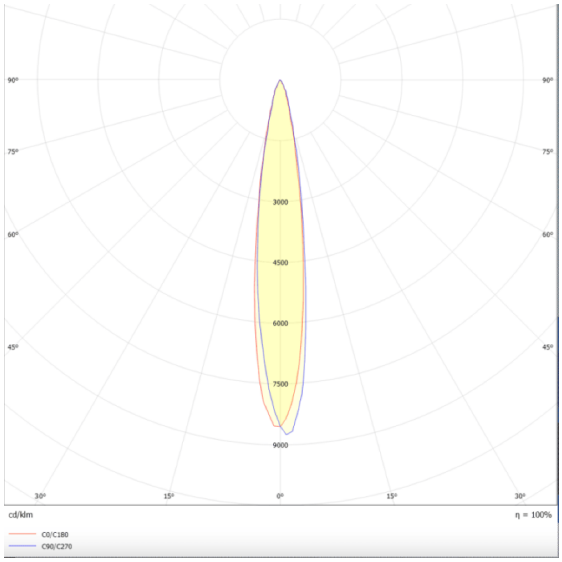
Photometry