TILT

Lavov downlight from the family TILT with a power of 15W and a beam angle of 24º. Finished in White colour. With a total lumen output of 1500lm and a luminous efficacy of 100lm/W. Made in Die Cast Aluminum. Driver DALI. CCT 4000K.

Item code	**86.D039.2423.01**
Product type	**Indoor**
Category	**Downlights**
Family	**TILT**
Pictograms	

Scheme

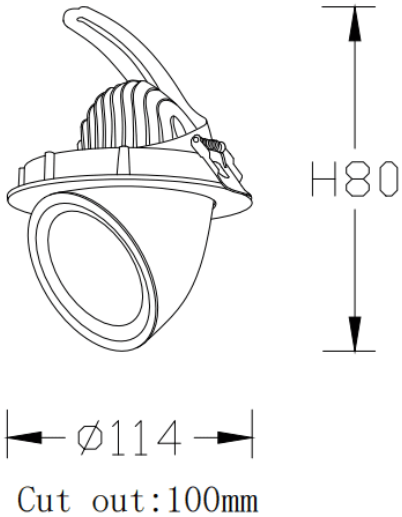

Photometry

Product	
Real power (W)	**15**
Real luminous flux (Lm)	**1500**
Luminous efficiency (Lm/W)	**100**
Beam angle (º)	**24º**
Life time (h)	**50000 h L80B10**
IP	**20**
Electrical class insulation	**Clas II**
Colour	**White**
Control gear included	**Yes**
Control gear	**DALI**
Flicker Free	**Yes**
Light source	**LED**
Type of LED	**COB**
Colour temperature (K)	**4000**
Colour consistency (SDCM)	**SDCM<3**
CRI	**80**

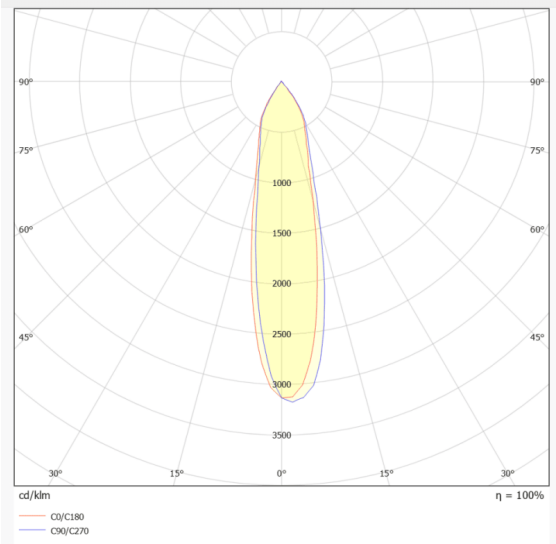
90°
90°
75°
75°
60°
60°
45°
45°
1000
1500
2000
2500
3000
3500
30°
15°
0°
15°
30°
cd/klm
η = 100%
C0/C180
C90/C270