1. Unpack the lighting fixture and check whether there is any damage. Then read the installation manual before installation。

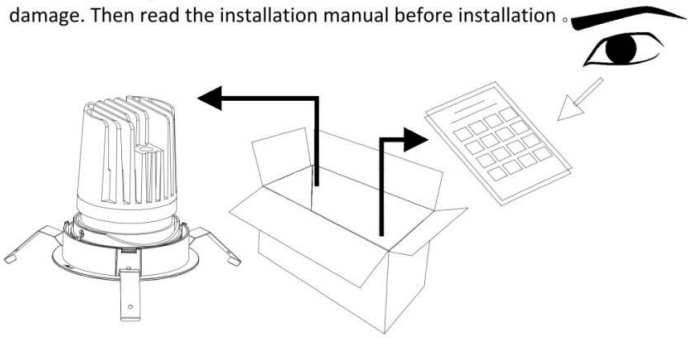

2. Turn off the power before installation。

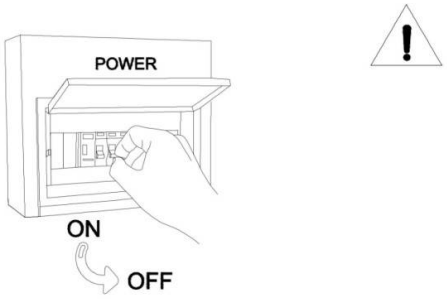

3. Open a hole on the ceiling by tools.

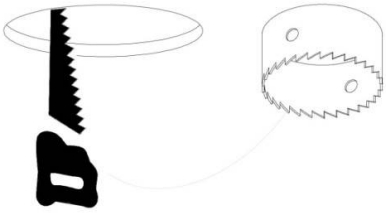

4. Connect the pre-installed wires to the lamp driver, place the driver behind the ceiling from the open hole Attention! The drive cannot be covered.

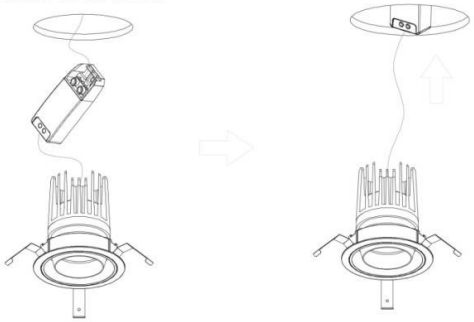

5. Fold up the three shrapnel of the downlight, then install the downlight to the hole as shown to make sure the downlight cannot fall off.

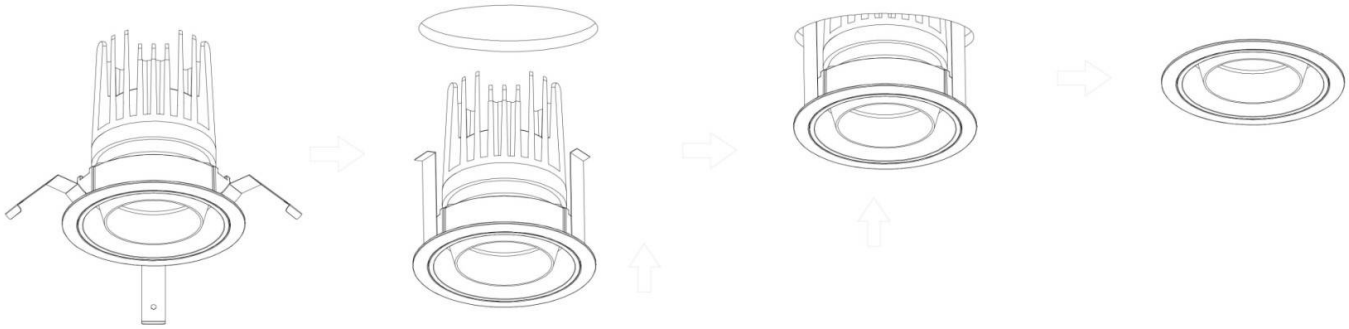
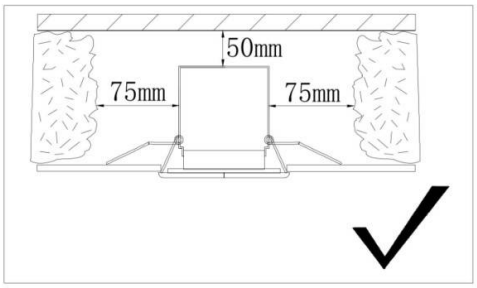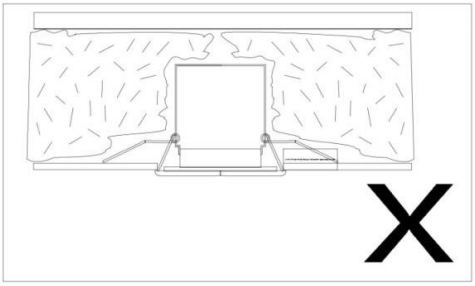
6. Make sure the distance between the downlight and the object as shown. The downlight cannot be covered.