Dimensions	
Product dimensions (mm)	**ϕ61xH84mm**

Scheme

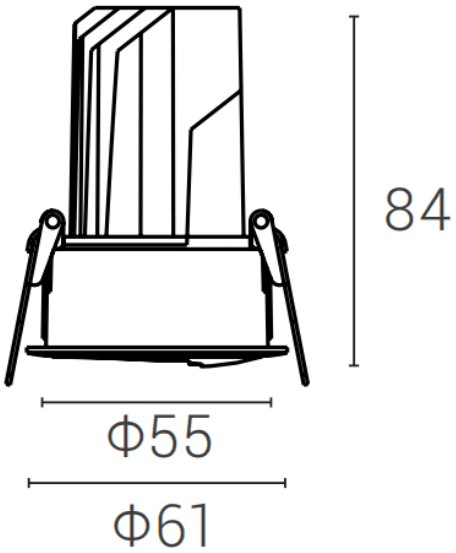

Photometry

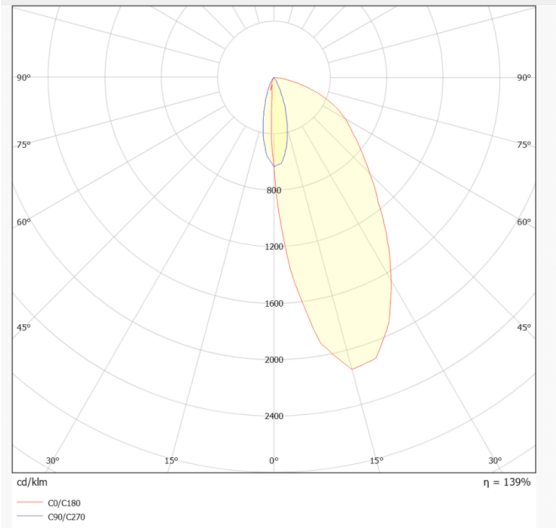

DECOWASH

Lavov downlight from the family DECOWASH with a power of 7W and a Wall washer lighting distribution. Finished in White colour. Dimensions ϕ61xH84mm.With a total lumen output of 437.4lm and a luminous efficacy of 60lm/W. Made in die cast aluminium. Driver DALI. CCT 3000K.

Item code	**86.D044.1353.01**
Product type	**Indoor**
Category	**Downlights**
Family	**DECOWASH**
Pictograms	220 240 V · CRI 90 · SDCM 3 · CE · Driver INCL. · DALI · IP 20 · 50000h L80B10

Product	
Real power (W)	**7**
Real luminous flux (Lm)	**437.4**
Luminous efficiency (Lm/W)	**60**
Beam angle (º)	**Wall washer**
IP	**IP20**
Colour	**White**
Control gear included	**yes**
Control gear	**DALI**
Light source	**LED**
Type of LED	**COB**
Colour temperature (K)	**3000**
Colour consistency (SDCM)	**SDCM<5**
CRI	**90**