Item code 86.D084.0433.02

- Installation and wiring of luminaire must be in accordance with all applicable local codes.
- Installation, inspection, and maintenance of luminaires should be performed by a qualified electrician.
- DO NOT make or alter any open holes in the luminaire. Do not modify the luminaire.
- DO NOT install damaged product.
- Make sure electrical power is OFF before and during installation and maintenance.
- Make sure the equipment is properly grounded.
- Make sure the supply voltage is same as the rated fixture voltage.

Cut out in the right size: 86.D084.0***.** 55mm, 86.D084.1***.**75mm ,86.D084.2***.**95mm,86.D085.0***.**55*55mm,86.D085.1***.**75*75mm

86.D085.2***.**95*95mm,86.D086.0***.**57mm,86.D086.1***.** 77mm,86.D086.2***.**97mm
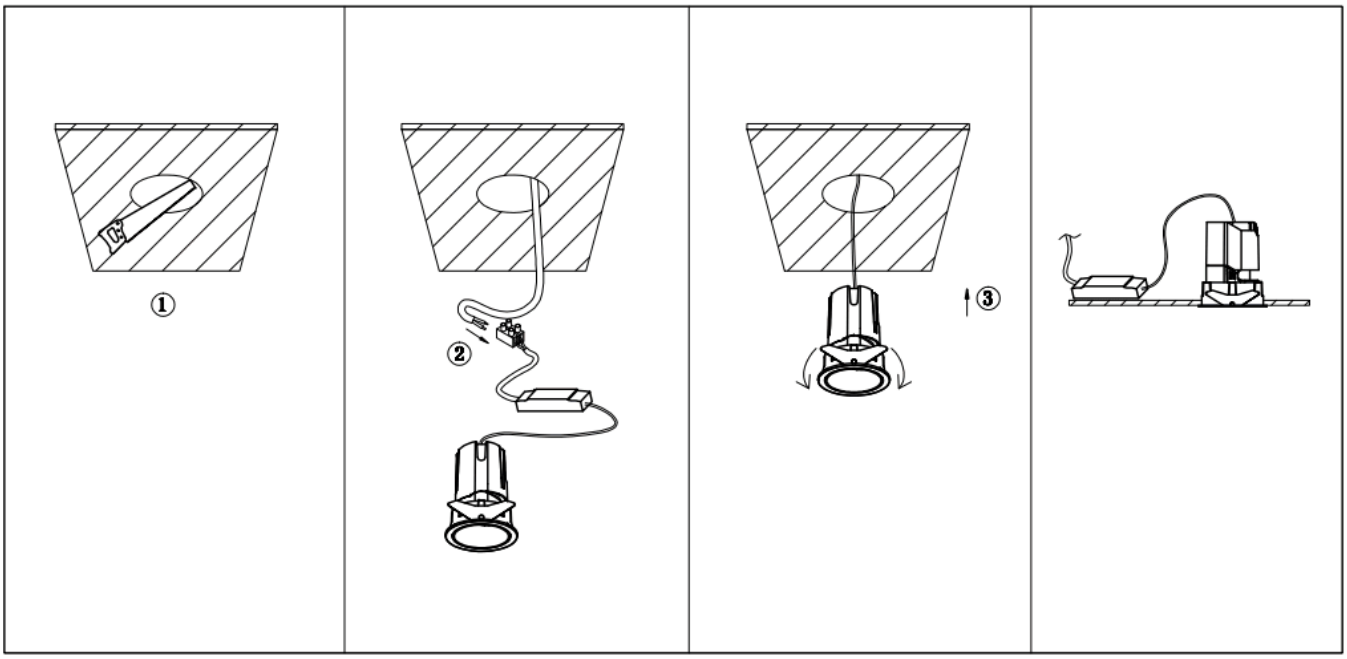
86.D087.0***.**57*57mm,86.D087.1***.** 77*77mm,86.D087.2***.**97*97mm,86.DS84.1***.**75mm,86.DS84.2***.**95mm
86.DS85.1***.**75*75mm,86.DS85.2***.**95*95mm,86.DS86.1***.** 77mm,86.DS86.2***.** 97mm,86.DS87.1***.**77*77mm
86.DS87.2***.**97*97mm,86.D284.0***.**128*67mm,86.D284.1***.**179*91mm,86.D284.2***.**223*112mm
86.D285.0***.**122*60mm,86.D285.1***.**164*77mm,86.D285.2***.**207*95mm,86.D286.0***.**128*67mm
86.D286.1***.**180*90mm,86.D286.2***.**225*111mm,86.D287.0***.**118*58mm,86.D287.1***.**165*77mm
86.D287.2***.**209*97mm