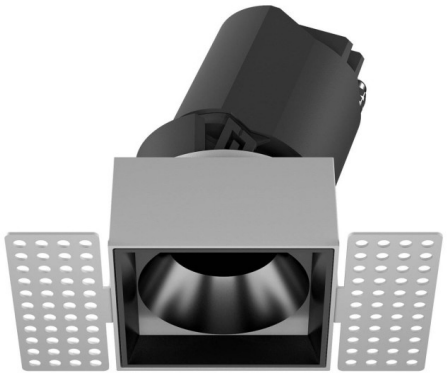

ZENITH IP65S Trimless

Lavov downlight from the family ZENITH IP65S Trimless with a power of 30W and a 36 degrees bem angle. CCT 3000K. White color. With a total lumen output of 2400lm and a luminous efficacy of 80lm/W. Made in Die Cast Aluminum. IP65degree of protection. Class II isolation. ON/OFFdriver. UGR19. CRI90.

Item code	**86.D087.2331.01**
Product type	**Indoor**
Category	**Downlights**
Family	**ZENITH**
Subfamily	**ZENITH IP65S Trimless**
Pictograms	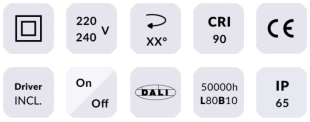

Dimensions	
Product dimensions (mm)	**94*94*146mm**

Scheme

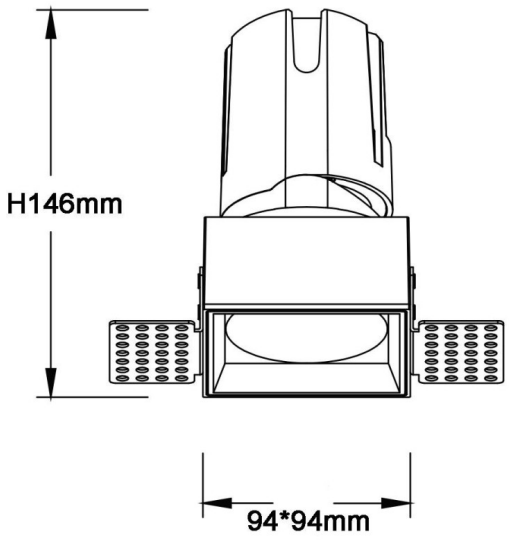

Product	
Real power (W)	**30**
Real luminous flux (Lm)	**2400**
Luminous efficiency (Lm/W)	**80**
Beam angle (º)	**36**
Life time (h)	**50000 h L80B10**
IP	**65**
Electrical class insulation	**Clas II**
Colour	**White**
U. G. R	**19**
Control gear included	**Yes**
Control gear	**ON/OFF**
Flicker Free	**Yes**
Light source	**LED**
Type of LED	**COB**
Colour temperature (K)	**3000**
Colour consistency (SDCM)	**SDCM3**
CRI	**90**