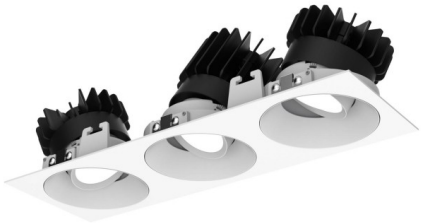

Trim cardan 3

Lavov downlight from the family Trim cardan 3 with a power of 3x25W and a beam angle of 55º. Finished in black colour. With a total lumen output of 3x2394lm and a luminous efficacy of 95.76lm/W. Made in die cast aluminium and PC lenses. Driver DALI dimmable . CCT 3000K.

Item code	**86.D092.2343.02**
Product type	**Indoor**
Category	**Downlights**
Family	**Cardan**
Subfamily	**Trim cardan 3**
Pictograms	CRI 90, CE, Driver INCL., On Off, DALI, IP 20, 50000h L80B10, 355°,

Dimensions	
Product dimensions (mm)	**L335*H112*94mm**

Scheme

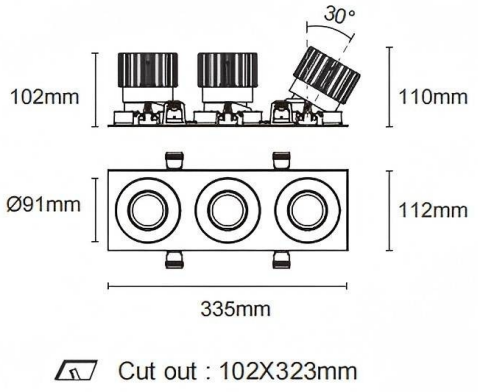

Product	
Real power (W)	**3x25**
Real luminous flux (Lm)	**3x2394**
Luminous efficiency (Lm/W)	**95.76**
Beam angle (º)	**55º**
Life time (h)	**50000hrs L80B10**
IP	**IP44**
Colour	**black**
Control gear included	**yes**
Control gear	**DALI dimmable**
Flicker Free	**yes**
Light source	**led**
Type of LED	**COB**
Colour temperature (K)	**3000**
Colour consistency (SDCM)	**SDCM<3**
CRI	**90**