Trimless cardan 3

Lavov downlight from the family Trimless cardan 3 with a power of 3x17W and a beam angle of 20º. Finished in black colour. With a total lumen output of 3x1580lm and a luminous efficacy of 93lm/W. Made in die cast aluminium and PC lenses. Driver On-Off no dim . CCT 4000K.

Item code	**86.D095.1411.02**
Product type	**Indoor**
Category	**Downlights**
Family	**Cardan**
Subfamily	**Trimless cardan 3**
Pictograms	CRI 90 · CE · Driver INCL. · On Off · DALI · IP 20 · 50000h L80B10 · 355°

Dimensions	
Product dimensions (mm)	**L379*W156*H94mm**

Scheme

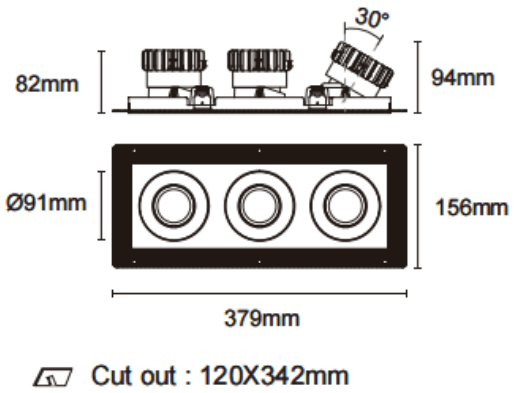

Product	
Real power (W)	**3x17**
Real luminous flux (Lm)	**3x1580**
Luminous efficiency (Lm/W)	**93**
Beam angle (º)	**20º**
Life time (h)	**50000hrs L80B10**
IP	**IP44**
Colour	**black**
Control gear included	**yes**
Control gear	**On-Off no dim**
Flicker Free	**yes**
Light source	**led**
Type of LED	**COB**
Colour temperature (K)	**4000**
Colour consistency (SDCM)	**SDCM<3**
CRI	**90**