Item code 86.D095.2419.01

- Installation and wiring of luminaire must be in accordance with all applicable local codes.
- Installation, inspection, and maintenance of luminaires should be performed by a qualified electrician.
- DO NOT make or alter any open holes in the luminaire. Do not modify the luminaire.
- DO NOT install damaged product.
- Make sure electrical power is OFF before and during installation and maintenance.
- Make sure the equipment is properly grounded.
- Make sure the supply voltage is same as the rated fixture voltage.

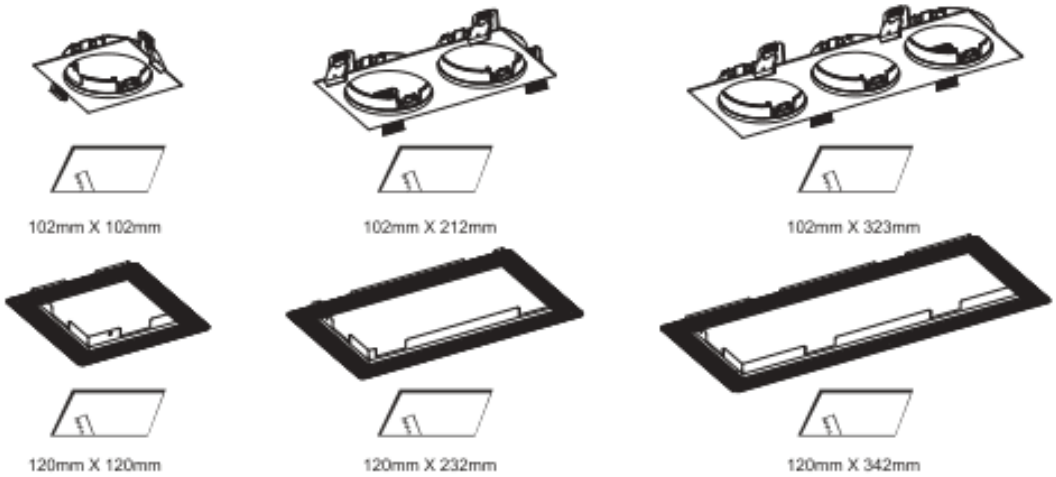
102mm X 102mm
102mm X 212mm
102mm X 323mm
120mm X 120mm
120mm X 232mm
120mm X 342mm

A

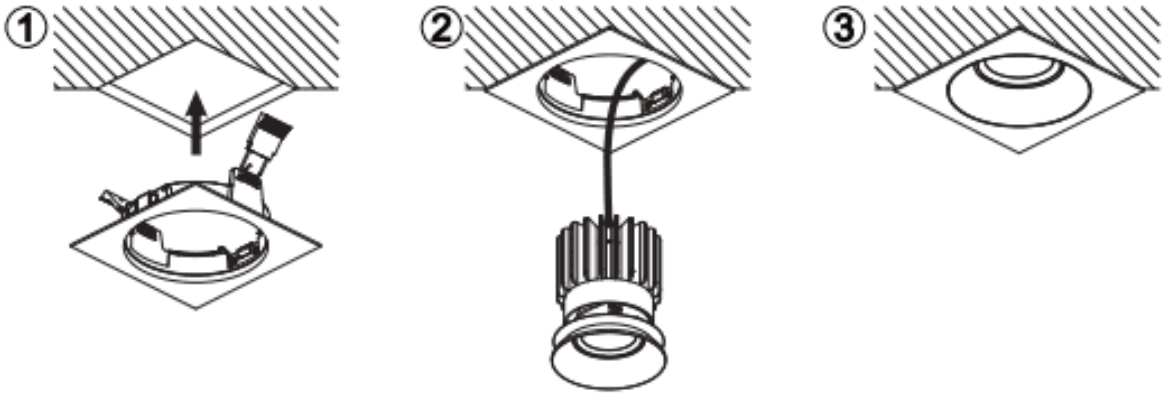
1
2
3

B

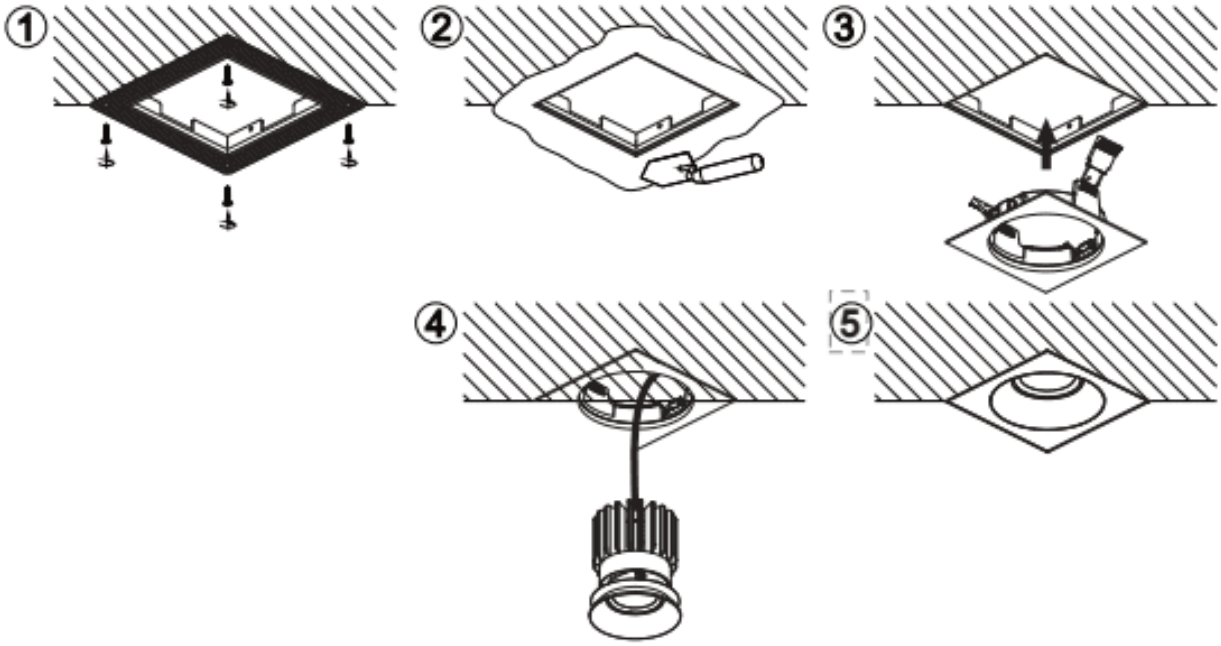
1
2
3
4
5