Kepler 3

Lavov downlight from the family Kepler with a power of 12W and a beam angle of 24º. Finished in matt bronze colour. With a total lumen output of 726lm and a luminous efficacy of 60,5lm/W. Made in die cast aluminium and PC lenses. Driver DALI dimmable. CCT 4000K.

Item code	**86.D099.1423.31**
Product type	**Indoor**
Category	**Downlights**
Family	**Kepler**
Subfamily	**Kepler 3**
Pictograms	

Dimensions	
Product dimensions (mm)	**ø62*H59mm**

Product	
Real power (W)	**12**
Real luminous flux (Lm)	**806**
Luminous efficiency (Lm/W)	**67**
Beam angle (º)	**24º**
Life time (h)	**50000hrs L80B11**
IP	**IP44**
Colour	**matt bronze**
Control gear included	**yes**
Control gear	**DALI dimmable**
Flicker Free	**yes**
Light source	**led**
Type of LED	**COB**
Colour temperature (K)	**4000**
Colour consistency (SDCM)	**SDCM<3**
CRI	**80**
IK	**06**

Scheme

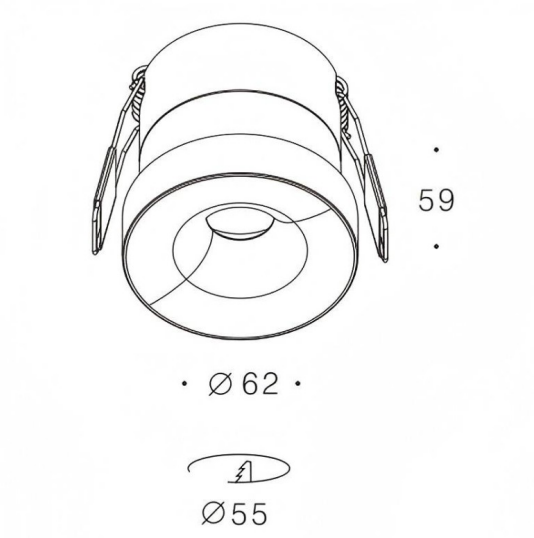

Photometry

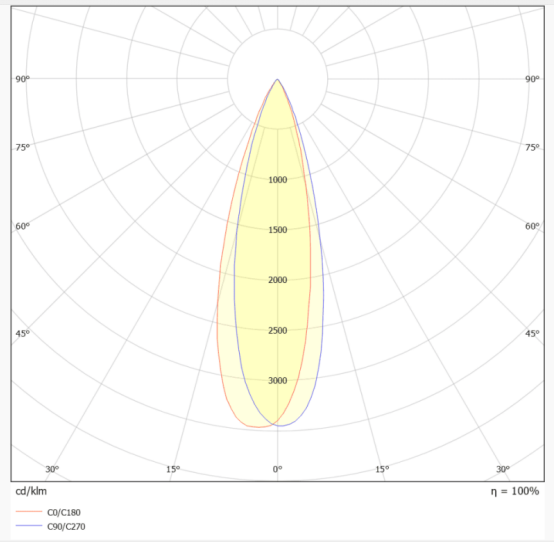
90°
90°
75°
75°
60°
60°
45°
45°
1000
1500
2000
2500
3000
30°
15°
0°
15°
30°
cd/klm
η = 100%
C0/C180
C90/C270