

MINI F-T

Lavov downlight from the family MINI F-T with a power of 10W and a beam angle of 24º. Finished in White colour. Fix trimless version.With a total lumen output of 840lm and a luminous efficacy of 84lm/W. Made in Die Cast Aluminum. Driver DALI. CCT 2700K.

Item code	**86.D103.5223.01**
Product type	**Indoor**
Category	**Downlights**
Family	**MINI**
Subfamily	**MINI F-T**
Pictograms	CRI 90 · CE · Driver INCL. · On Off · DALI · IP 20

Dimensions	
Product dimensions (mm)	**ø78.5*H150.5mm**

Scheme

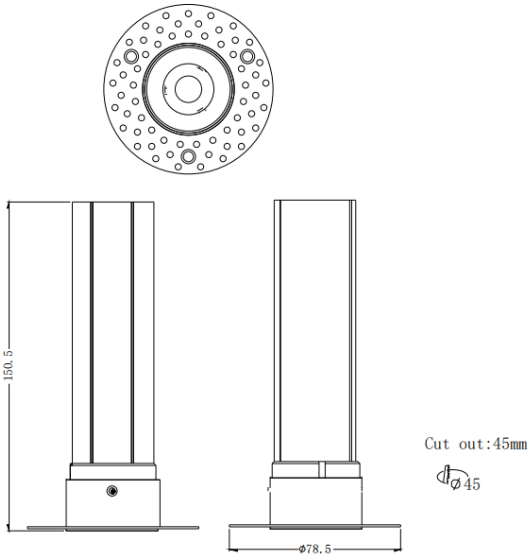

Product	
Real power (W)	**10**
Real luminous flux (Lm)	**840**
Luminous efficiency (Lm/W)	**84**
Beam angle (º)	**24**
Life time (h)	**50000 h L80B10**
IP	**20**
Electrical class insulation	**Clas II**
Colour	**White**
Control gear included	**Yes**
Control gear	**DALI**
Flicker Free	**Yes**
Light source	**LED**
Type of LED	**COB**
Colour temperature (K)	**2700**
Colour consistency (SDCM)	**SDCM3**
CRI	**90**

Photometry

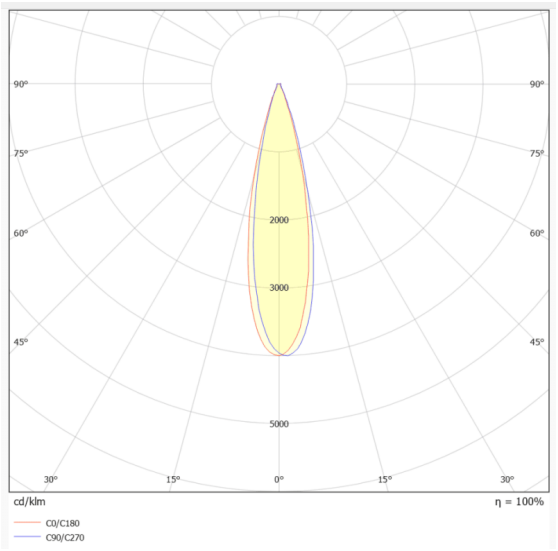
90°
90°
75°
75°
60°
60°
45°
45°
2000
3000
5000
30°
15°
0°
15°
30°
cd/klm
η = 100%
C0/C180
C90/C270