

MINI F-T

Lavov downlight from the family MINI F-T with a power of 10W and a beam angle of 36º. Finished in White colour. Fix trimless version.With a total lumen output of 951.6lm and a luminous efficacy of 95.16lm/W. Made in Die Cast Aluminum. Driver DALI. CCT 3000K.

Item code	**86.D103.6333.01**
Product type	**Indoor**
Category	**Downlights**
Family	**MINI**
Subfamily	**MINI F-T**
Pictograms	CRI 90 · CE · Driver INCL. · On Off · DALI · IP 20

Dimensions	
Product dimensions (mm)	**ø88.5*H103mm**

Scheme

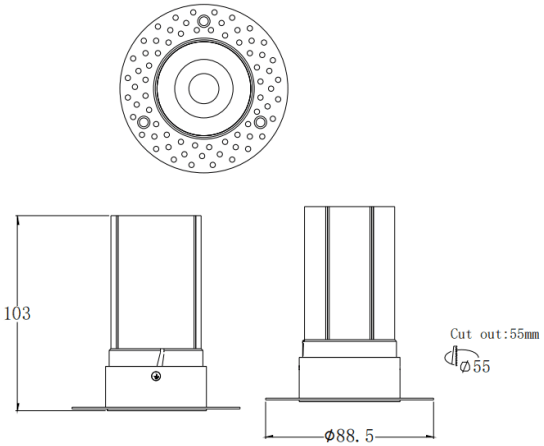

Product	
Real power (W)	**10**
Real luminous flux (Lm)	**951.6**
Luminous efficiency (Lm/W)	**95.16**
Beam angle (º)	**36**
Life time (h)	**50000 h L80B10**
IP	**20**
Electrical class insulation	**Clas II**
Colour	**White**
Control gear included	**Yes**
Control gear	**DALI**
Flicker Free	**Yes**
Light source	**LED**
Type of LED	**COB**
Colour temperature (K)	**3000**
Colour consistency (SDCM)	**SDCM3**
CRI	**90**

Photometry

