

MINI A

Lavov downlight from the family MINI A with a power of 7W and a beam angle of 24º. Finished in White colour. Adjustable version.With a total lumen output of 350lm and a luminous efficacy of 50lm/W. Made in Die Cast Aluminum. Driver DALI. CCT 2700K.

Item code	**86.D104.3223.01**
Product type	**Indoor**
Category	**Downlights**
Family	**MINI**
Subfamily	**MINI A**
Pictograms	CRI 90 · CE · Driver INCL. · On Off · DALI · IP 20

Dimensions	
Product dimensions (mm)	**ø40*H97mm**

Scheme

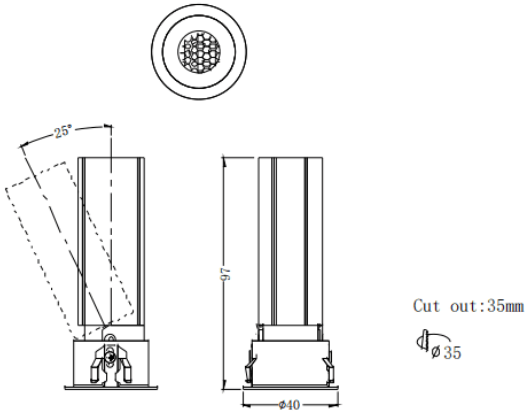

Product	
Real power (W)	**7**
Real luminous flux (Lm)	**350**
Luminous efficiency (Lm/W)	**50**
Beam angle (º)	**24**
Life time (h)	**50000 h L80B10**
IP	**20**
Electrical class insulation	**Clas II**
Colour	**White**
Control gear included	**Yes**
Control gear	**DALI**
Flicker Free	**Yes**
Light source	**LED**
Type of LED	**COB**
Colour temperature (K)	**2700**
Colour consistency (SDCM)	**SDCM3**
CRI	**90**