

## MINI A-T

Lavov downlight from the family MINI A-T with a power of 10W and a beam angle of 24º. Finished in White colour. Adjustable trimless version.With a total lumen output of 951.6lm and a luminous efficacy of 95.16lm/W. Made in Die Cast Aluminum. Driver DALI. CCT 3000K.

| | |
|---|---|
| **Item code** | **86.D105.6323.01** |
| **Product type** | **Indoor** |
| **Category** | **Downlights** |
| **Family** | **MINI** |
| **Subfamily** | **MINI A-T** |
| **Pictograms** | CRI 90 · CE · Driver INCL. · On Off · DALI · IP 20 |

| **Dimensions** | |
|---|---|
| **Product dimensions (mm)** | **ø88.5*H106.5mm** |

### Scheme

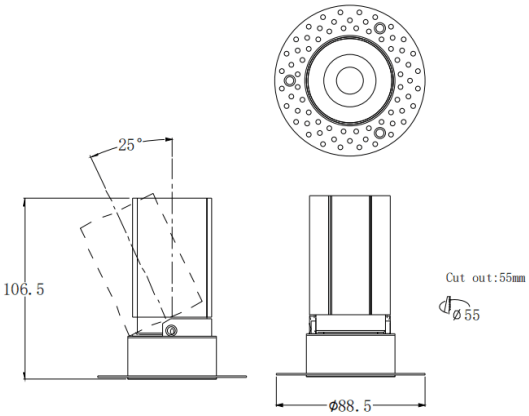


### Photometry

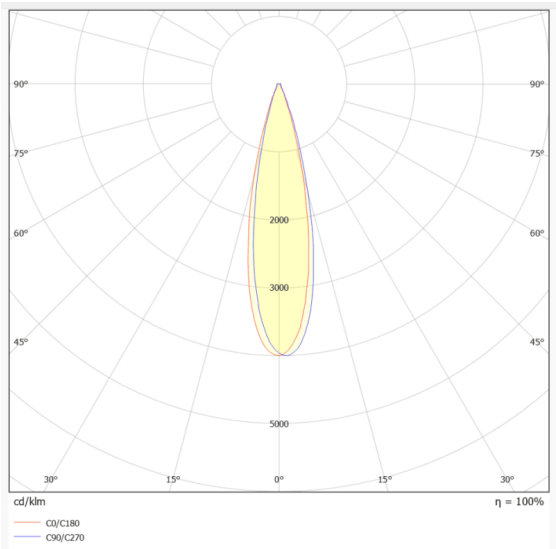


| **Product** | |
|---|---|
| **Real power (W)** | **10** |
| **Real luminous flux (Lm)** | **951.6** |
| **Luminous efficiency (Lm/W)** | **95.16** |
| **Beam angle (º)** | **24** |
| **Life time (h)** | **50000 h L80B10** |
| **IP** | **20** |
| **Electrical class insulation** | **Clas II** |
| **Colour** | **White** |
| **Control gear included** | **Yes** |
| **Control gear** | **DALI** |
| **Flicker Free** | **Yes** |
| **Light source** | **LED** |
| **Type of LED** | **COB** |
| **Colour temperature (K)** | **3000** |
| **Colour consistency (SDCM)** | **SDCM3** |
| **CRI** | **90** |