

MINI WW-T

Lavov downlight from the family MINI WW-T with a power of 15W and a beam angle of wall washer. Finished in Black colour. Wall washer fix version trimless.With a total lumen output of 1020lm and a luminous efficacy of 68lm/W. Made in Die Cast Aluminum. Driver DALI. CCT 2700K.

Item code	**86.D109.2253.02**
Product type	**Indoor**
Category	**Downlights**
Family	**MINI**
Subfamily	**MINI WW-T**
Pictograms	CRI 90 · CE · Driver INCL. · On Off · DALI · IP 20

Dimensions	
Product dimensions (mm)	**ø88.3*H110mm**

Scheme

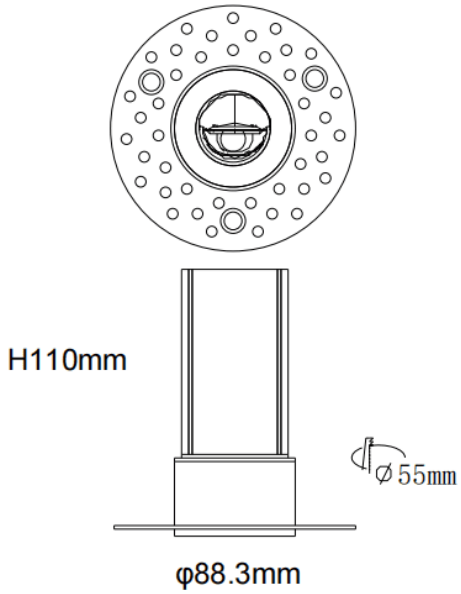

Product	
Real power (W)	**15**
Real luminous flux (Lm)	**1020**
Luminous efficiency (Lm/W)	**68**
Beam angle (º)	**wall washer**
Life time (h)	**50000 h L80B10**
IP	**20**
Electrical class insulation	**Clas II**
Colour	**Black**
Control gear included	**Yes**
Control gear	**DALI**
Flicker Free	**Yes**
Light source	**LED**
Type of LED	**SMD**
Colour temperature (K)	**2700**
Colour consistency (SDCM)	**SDCM3**
CRI	**90**