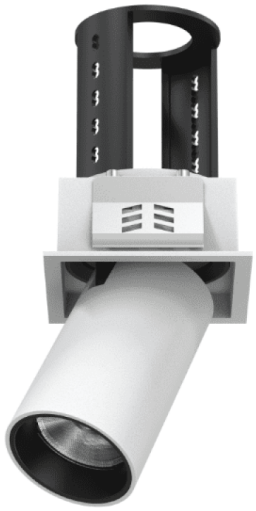

PTT S

Lavov downlight from the family PTT S with a power of 7W and a beam angle of 24º. Finished in Black colour. Trim version. With a total lumen output of 700lm and a luminous efficacy of 100lm/W. Made in Die Cast Aluminum. Driver DALI. CCT 3000K.

Item code	**86.D150.1323.02**
Product type	**Indoor**
Category	**Downlights**
Family	**PTT**
Subfamily	**PTT S**
Pictograms	

Dimensions	
Product dimensions (mm)	**ø52xH85mm**

Product	
Real power (W)	**7**
Real luminous flux (Lm)	**700**
Luminous efficiency (Lm/W)	**100**
Beam angle (º)	**24**
Life time (h)	**50000 h L80B10**
Colour	**Black**
Control gear included	**Yes**
Control gear	**DALI**
Flicker Free	**Yes**
Light source	**LED**
Type of LED	**COB**
Colour temperature (K)	**3000**
Colour consistency (SDCM)	**SDCM<3**
CRI	**90**
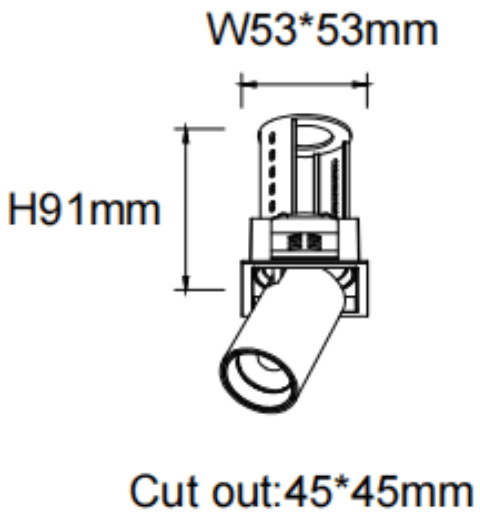
Scheme