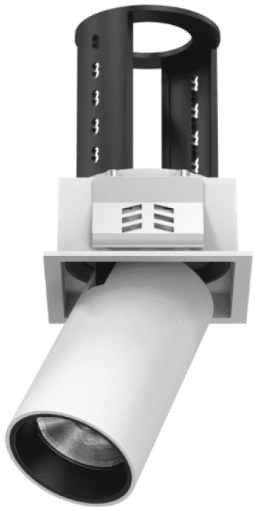

PTT S-Smart

Lavov downlight from the family PTT S-Smart with a power of 10W and a beam angle of 36º. Finished in Black colour. Trim version. With a total lumen output of 1000lm and a luminous efficacy of 100lm/W. Made in Die Cast Aluminum. Driver Dimmable Casamby ready. CCT 3000K.

Item code	**86.D150.2339.02**
Product type	**Indoor**
Category	**Downlights**
Family	**PTT**
Subfamily	**PTT S-Smart**
Pictograms	

Dimensions	
Product dimensions (mm)	**ø62xH86mm**

Scheme

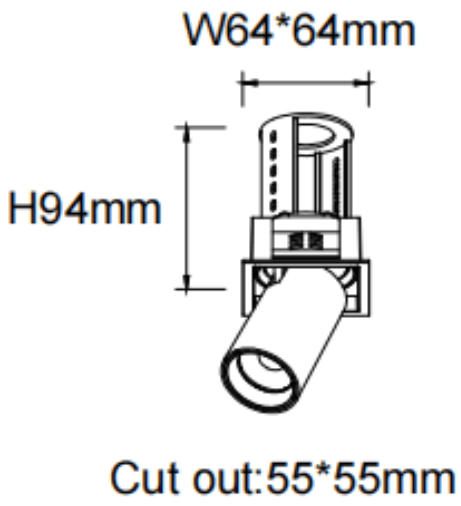

Product	
Real power (W)	**10**
Real luminous flux (Lm)	**1000**
Luminous efficiency (Lm/W)	**100**
Beam angle (º)	**36**
Life time (h)	**50000 h L80B10**
Colour	**Black**
Control gear included	**Yes**
Control gear	**Dimmable Casamby ready**
Flicker Free	**Yes**
Light source	**LED**
Type of LED	**COB**
Colour temperature (K)	**3000**
Colour consistency (SDCM)	**SDCM<3**
CRI	**90**