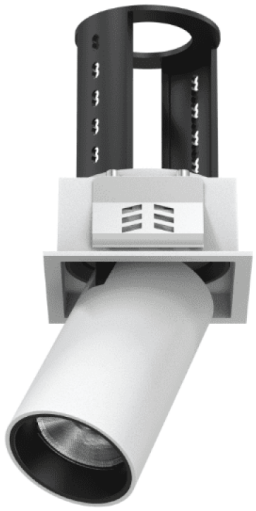

## PTT S-Smart

Lavov downlight from the family PTT S-Smart with a power of 18W and a beam angle of 15º. Finished in Black colour. Trim version. With a total lumen output of 1800lm and a luminous efficacy of 100lm/W. Made in Die Cast Aluminum. Driver Dimmable Casamby ready. CCT 3000K.

| | |
|---|---|
| **Item code** | **86.D150.3319.02** |
| **Product type** | **Indoor** |
| **Category** | **Downlights** |
| **Family** | **PTT** |
| **Subfamily** | **PTT S-Smart** |
| **Pictograms** | |

| **Dimensions** | |
|---|---|
| **Product dimensions (mm)** | **∅84xH105mm** |

| **Product** | |
|---|---|
| **Real power (W)** | **18** |
| **Real luminous flux (Lm)** | **1800** |
| **Luminous efficiency (Lm/W)** | **100** |
| **Beam angle (º)** | **15** |
| **Life time (h)** | **50000 h L80B10** |
| **Colour** | **Black** |
| **Control gear included** | **Yes** |
| **Control gear** | **Dimmable Casamby ready** |
| **Flicker Free** | **Yes** |
| **Light source** | **LED** |
| **Type of LED** | **COB** |
| **Colour temperature (K)** | **3000** |
| **Colour consistency (SDCM)** | **SDCM3** |
| **CRI** | **90** |
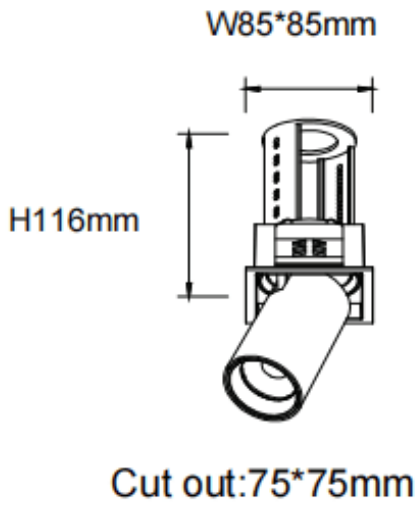
**Scheme**