PTT ST2

Lavov downlight from the family PTT ST2 with a power of 2x10W and a beam angle of 24º. Finished in Black colour. Trimless version. With a total lumen output of 2000lm and a luminous efficacy of 100lm/W. Made in Die Cast Aluminum. Driver DALI. CCT 4000K.

Item code	**86.D153.2423.02**
Product type	**Indoor**
Category	**Downlights**
Family	**PTT**
Subfamily	**PTT ST2**
Pictograms	

Dimensions	
Product dimensions (mm)	**ø140x79xH91mm**

Scheme

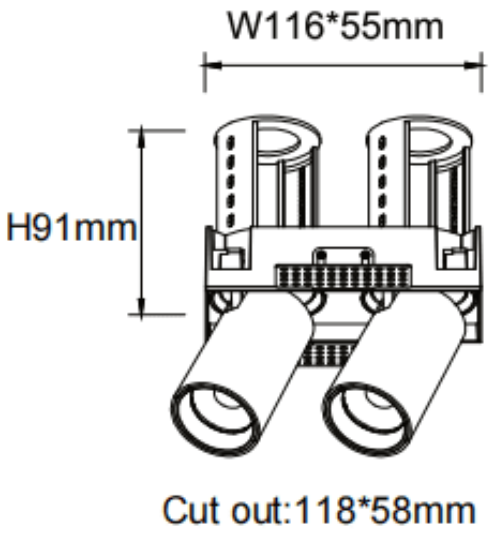

Product	
Real power (W)	**2x10**
Real luminous flux (Lm)	**2000**
Luminous efficiency (Lm/W)	**100**
Beam angle (º)	**24**
Life time (h)	**50000 h L80B10**
Colour	**Black**
Control gear included	**Yes**
Control gear	**DALI**
Flicker Free	**Yes**
Light source	**LED**
Type of LED	**COB**
Colour temperature (K)	**4000**
Colour consistency (SDCM)	**SDCM3**
CRI	**90**