## PTT ST2

Lavov downlight from the family PTT ST2 with a power of 2x10W and a beam angle of 24º. Finished in Black colour. Trimless version. With a total lumen output of 2000lm and a luminous efficacy of 100lm/W. Made in Die Cast Aluminum. Driver DALI. CCT 4000K.

| | |
|---|---|
| **Item code** | **86.D153.2423.02** |
| **Product type** | **Indoor** |
| **Category** | **Downlights** |
| **Family** | **PTT** |
| **Subfamily** | **PTT ST2** |
| **Pictograms** | |

| **Dimensions** | |
|---|---|
| **Product dimensions (mm)** | **ø140x79xH91mm** |

| **Product** | |
|---|---|
| **Real power (W)** | **2x10** |
| **Real luminous flux (Lm)** | **2000** |
| **Luminous efficiency (Lm/W)** | **100** |
| **Beam angle (º)** | **24** |
| **Life time (h)** | **50000 h L80B10** |
| **Colour** | **Black** |
| **Control gear included** | **Yes** |
| **Control gear** | **DALI** |
| **Flicker Free** | **Yes** |
| **Light source** | **LED** |
| **Type of LED** | **COB** |
| **Colour temperature (K)** | **4000** |
| **Colour consistency (SDCM)** | **SDCM<3** |
| **CRI** | **90** |
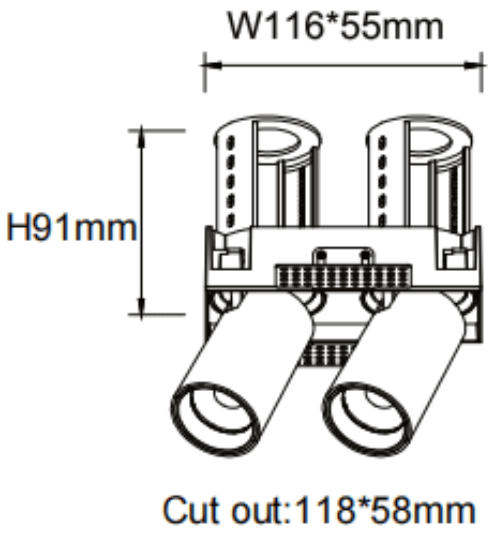
**Scheme**