

| Dimensions | |
|---|---|
| **Product dimensions (mm)** | **Φ125X239xH122mm** |

**Scheme**

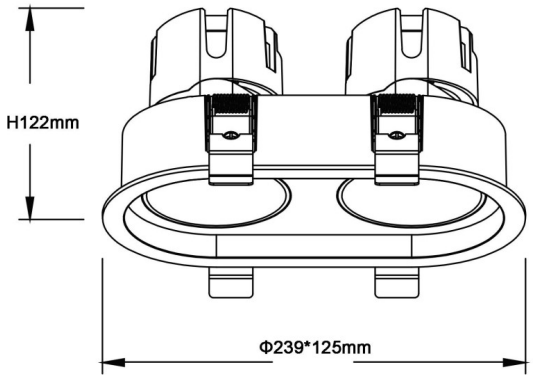


## ZENITH IP65R X2 Smart

Lavov downlight from the family ZENITH IP65R X2 Smart with a power of 2X20W and a 60 degrees bem angle. CCT 3000K. White color. With a total lumen output of 2X1600lm and a luminous efficacy of 80lm/W. Made in Die Cast Aluminum. IP65degree of protection. Class II isolation. DALI wireless Casamby driver. UGR19. CRI90.

| | |
|---|---|
| **Item code** | **86.D284.2349.01** |
| **Product type** | **Indoor** |
| **Category** | **Downlights** |
| **Family** | **ZENITH** |
| **Subfamily** | **ZENITH IP65R X2 Smart** |
| **Pictograms** | 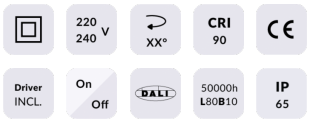 |



| Product | |
|---|---|
| **Real power (W)** | **2X20** |
| **Real luminous flux (Lm)** | **2X1600** |
| **Luminous efficiency (Lm/W)** | **80** |
| **Beam angle (º)** | **60** |
| **Life time (h)** | **50000 h L80B10** |
| **IP** | **65** |
| **Electrical class insulation** | **Clas II** |
| **Colour** | **White** |
| **U. G. R** | **19** |
| **Control gear included** | **Yes** |
| **Control gear** | **DALI wireless Casamby** |
| **Flicker Free** | **Yes** |
| **Light source** | **LED** |
| **Type of LED** | **COB** |
| **Colour temperature (K)** | **3000** |
| **Colour consistency (SDCM)** | **SDCM3** |
| **CRI** | **90** |