| Dimensions | |
|---|---|
| Product dimensions (mm) | 180*91xH91mm |

## Scheme

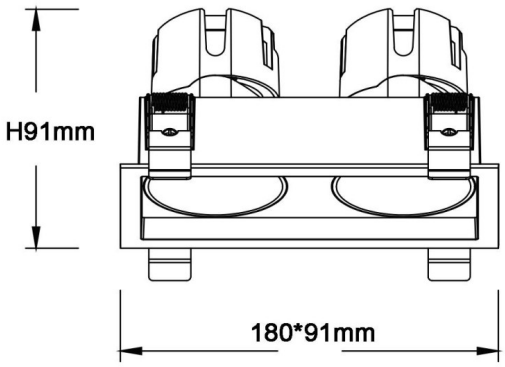


## ZENITH IP65SX2

Lavov downlight from the family ZENITH IP65SX2 with a power of 2X12W and a 12 degrees bem angle. CCT 3000K. White color. With a total lumen output of 2X960lm and a luminous efficacy of 80lm/W. Made in Die Cast Aluminum. IP65degree of protection. Class II isolation. ON/OFFdriver. UGR19. CRI90.

| | |
|---|---|
| Item code | 86.D285.1311.01 |
| Product type | Indoor |
| Category | Downlights |
| Family | ZENITH |
| Subfamily | ZENITH IP65SX2 |
| Pictograms | |

| Product | |
|---|---|
| Real power (W) | 2X12 |
| Real luminous flux (Lm) | 2X960 |
| Luminous efficiency (Lm/W) | 80 |
| Beam angle (º) | 12 |
| Life time (h) | 50000 h L80B10 |
| IP | 65 |
| Electrical class insulation | Clas II |
| Colour | White |
| U. G. R | 19 |
| Control gear included | Yes |
| Control gear | ON/OFF |
| Flicker Free | Yes |
| Light source | LED |
| Type of LED | COB |
| Colour temperature (K) | 3000 |
| Colour consistency (SDCM) | SDCM3 |
| CRI | 90 |