Dimensions	
Product dimensions (mm)	180*91xH91mm

Scheme

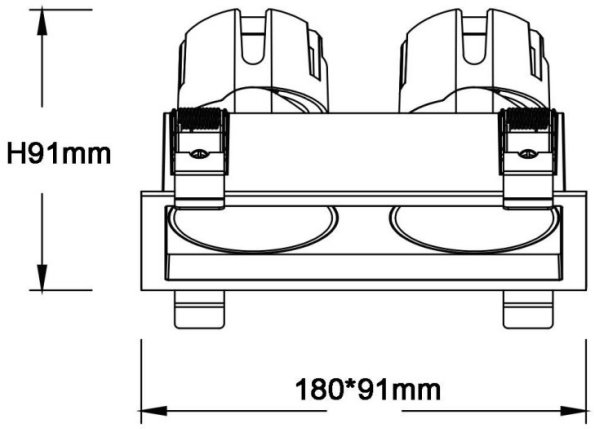

ZENITH IP65SX2

Lavov downlight from the family ZENITH IP65SX2 with a power of 2X12W and a 12 degrees bem angle. CCT 3000K. White color. With a total lumen output of 2X960lm and a luminous efficacy of 80lm/W. Made in Die Cast Aluminum. IP65degree of protection. Class II isolation. ON/OFFdriver. UGR19. CRI90.

Item code	86.D285.1311.01
Product type	Indoor
Category	Downlights
Family	ZENITH
Subfamily	ZENITH IP65SX2
Pictograms	220 240 V, XX°, CRI 90, CE, Driver INCL., On Off, DALI, 50000h L80B10, IP 65

Product	
Real power (W)	2X12
Real luminous flux (Lm)	2X960
Luminous efficiency (Lm/W)	80
Beam angle (º)	12
Life time (h)	50000 h L80B10
IP	65
Electrical class insulation	Clas II
Colour	White
U. G. R	19
Control gear included	Yes
Control gear	ON/OFF
Flicker Free	Yes
Light source	LED
Type of LED	COB
Colour temperature (K)	3000
Colour consistency (SDCM)	SDCM<3
CRI	90