Dimensions	
Product dimensions (mm)	180*91xH91mm

Scheme

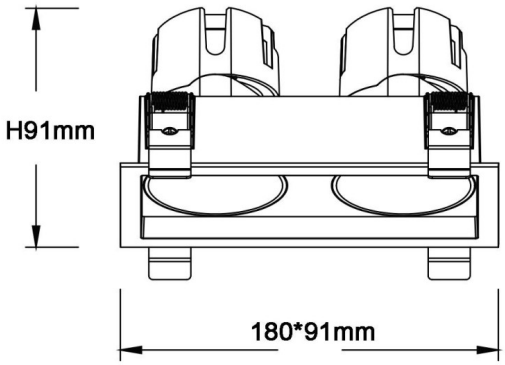

ZENITH IP65SX2

Lavov downlight from the family ZENITH IP65SX2 with a power of 2X12W and a 12 degrees bem angle. CCT 3000K. White color. With a total lumen output of 2X960lm and a luminous efficacy of 80lm/W. Made in Die Cast Aluminum. IP65degree of protection. Class II isolation. DALIdriver. UGR19. CRI90.

Item code	86.D285.1313.01
Product type	Indoor
Category	Downlights
Family	ZENITH
Subfamily	ZENITH IP65SX2
Pictograms	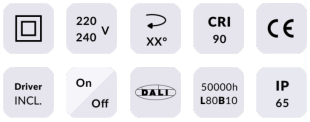

Product	
Real power (W)	2X12
Real luminous flux (Lm)	2X960
Luminous efficiency (Lm/W)	80
Beam angle (º)	12
Life time (h)	50000 h L80B10
IP	65
Electrical class insulation	Clas II
Colour	White
U. G. R	19
Control gear included	Yes
Control gear	DALI
Flicker Free	Yes
Light source	LED
Type of LED	COB
Colour temperature (K)	3000
Colour consistency (SDCM)	SDCM3
CRI	90