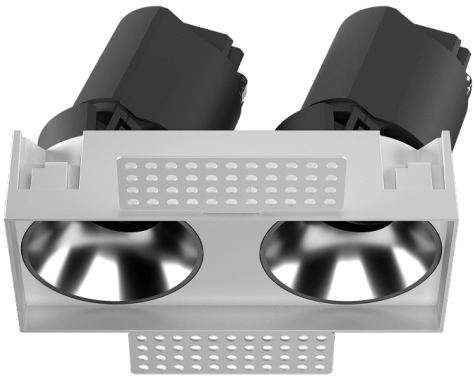

ZENITH IP65SX2 Smart Trimless

Lavov downlight from the family ZENITH IP65SX2 Smart Trimless with a power of 2X7W and a 24 degrees bem angle. CCT 4000K. White color. With a total lumen output of 2X560lm and a luminous efficacy of 80lm/W. Made in Die Cast Aluminum. IP65degree of protection. Class II isolation. DALI wireless Casamby driver. UGR19. CRI90.

Item code	**86.D287.0429.01**
Product type	**Indoor**
Category	**Downlights**
Family	**ZENITH**
Subfamily	**ZENITH IP65SX2 Smart Trimless**
Pictograms	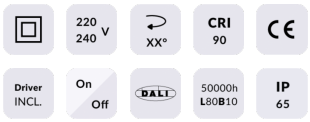

Dimensions	
Product dimensions (mm)	**116X55xH75mm**

Scheme

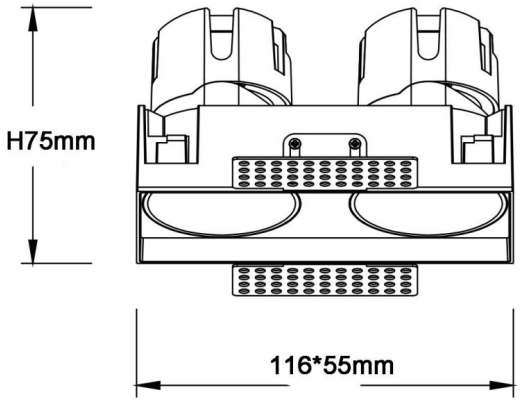

Product	
Real power (W)	**2X7**
Real luminous flux (Lm)	**2X560**
Luminous efficiency (Lm/W)	**80**
Beam angle (º)	**24**
Life time (h)	**50000 h L80B10**
IP	**65**
Electrical class insulation	**Clas II**
Colour	**White**
U. G. R	**19**
Control gear included	**Yes**
Control gear	**DALI wireless Casamby**
Flicker Free	**Yes**
Light source	**LED**
Type of LED	**COB**
Colour temperature (K)	**4000**
Colour consistency (SDCM)	**SDCM3**
CRI	**90**