

ZENITH IP65S Smart Trimless

Lavov downlight from the family ZENITH IP65S Smart Trimless with a power of 20W and a 60 degrees bem angle. CCT 3000K. black color. With a total lumen output of 1600lm and a luminous efficacy of 80lm/W. Made in Die Cast Aluminum. IP65degree of protection. Class II isolation. DALI+wireless Casambidriver. UGR19. CRI90.

Item code	**86.DS87.1349.02**
Product type	**Indoor**
Category	**Downlights**
Family	**ZENITH**
Subfamily	**ZENITH IP65S Smart Trimless**
Pictograms	

Dimensions	
Product dimensions (mm)	**85*85*121mm**

Scheme

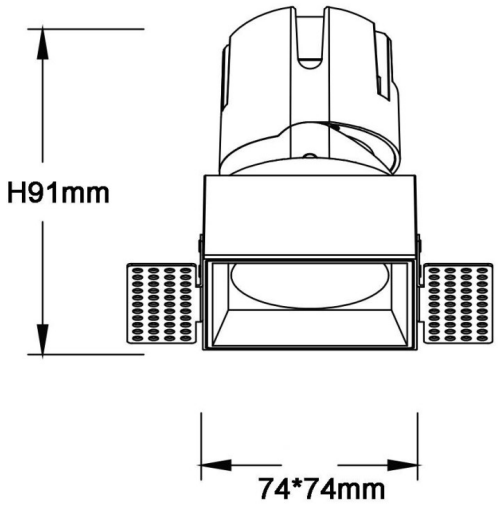

Photometry

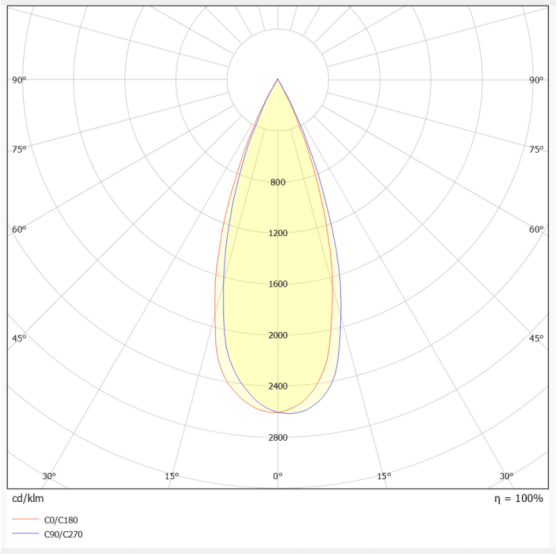

Product	
Real power (W)	**20**
Real luminous flux (Lm)	**1600**
Luminous efficiency (Lm/W)	**80**
Beam angle (º)	**60**
Life time (h)	**50000 h L80B10**
IP	**65**
Electrical class insulation	**Clas II**
Colour	**black**
U. G. R	**19**
Control gear	**DALI+wireless Casambi**
Flicker Free	**Yes**
Light source	**LED**
Type of LED	**COB**
Colour temperature (K)	**3000**
Colour consistency (SDCM)	**SDCM3**
CRI	**80**