FOCUS

Lavov Downlights from the family FOUCS ,power 13 W and CRI 90 with an optic 35 degrees made in Die Cast Aluminum finished in White with a real lumen output of 1207lm and an efficiency of92,84lm/W. ON/OFF driver.

Item code	**86.DT15.1331.01**
Product type	**Indoor**
Category	**Downlights**
Family	**FOCUS**
Pictograms	

Scheme

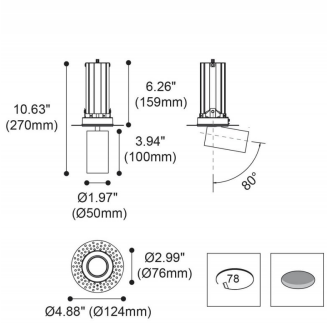

Product	
Real power (W)	**13**
Real luminous flux (Lm)	**1207**
Luminous efficiency (Lm/W)	**92.846153846153996**
Beam angle (º)	**35**
Life time (h)	**50000 h L80B10**
IP	**20**
Electrical class insulation	**Clas II**
Colour	**White**
Control gear included	**Yes**
Control gear	**ON/OFF**
Flicker Free	**Yes**
Light source	**LED**
Type of LED	**COB**
Colour temperature (K)	**3000**
Colour consistency (SDCM)	**SDCM<3**
CRI	**90**
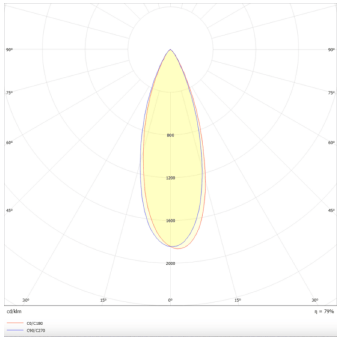
Photometry