

OVNI-R

Lavov Highbay from the family OVNI-R with a power of 200W and a 120 degrees beam angle. Surface mounted. With a total lumen output of 20000lm and a luminous efficiency of 100lm/W. Driver dim 1-10V .Made in Die cast aluminium and glass refractor . Class II issolation. IP65 and IK09 . Mains voltage 120-277V . UGR19. Finished in black colour. CCT 6000K.

Item code	**86.I037.2632.02**
Product type	**Indoor**
Category	**Industrial**
Family	**OVNI**
Subfamily	**OVNI-R**
Pictograms	CRI 80 · CE · Driver INCL. · On Off · 1-10V

Dimensions	
Product dimensions (mm)	**ø358*55mm**

Scheme

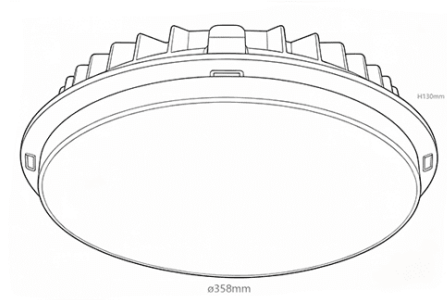

Product	
Real power (W)	**200**
Real luminous flux (Lm)	**20000**
Luminous efficiency (Lm/W)	**100**
Beam angle (º)	**120**
IP	**65**
Electrical class insulation	**Class II**
Electrical feeding	**120-277V**
Colour	**black**
U. G. R	**19**
Control gear included	**yes**
Control gear	**dim 1-10V**
Light source	**LED**
Type of LED	**sanan**
Colour temperature (K)	**6000**
IK	**09**