- Installation and wiring of luminaire must be in accordance with all applicable local codes.
- Installation, inspection, and maintenance of luminaires should be performed by a qualified electrician.
- DO NOT make or alter any open holes in the luminaire. Do not modify the luminaire.
- DO NOT install damaged product.
- Make sure electrical power is OFF before and during installation and maintenance.
- Make sure the equipment is properly grounded.
- Make sure the supply voltage is same as the rated fixture voltage.

1. How to wire one roll of LED strip light:

2. How to wire multiple LED strip light:

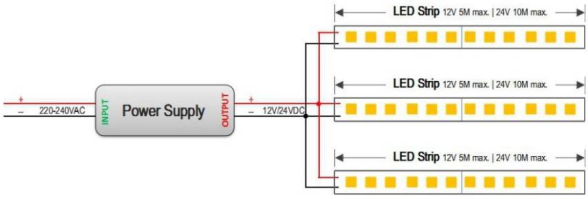

3.Wiring example for projects - 24VDC

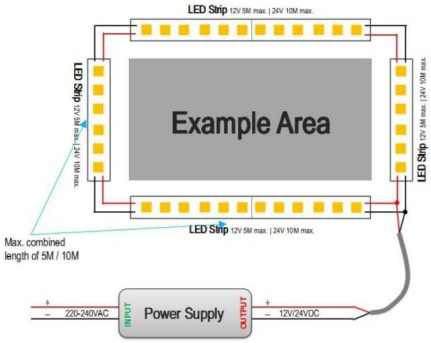

4. Wiring example for projects - Dimmable

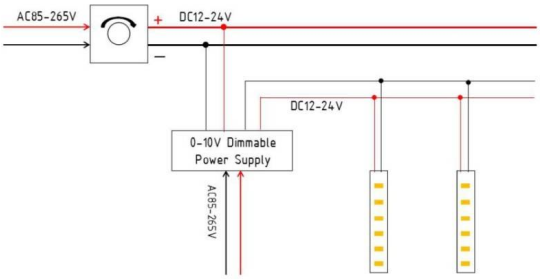
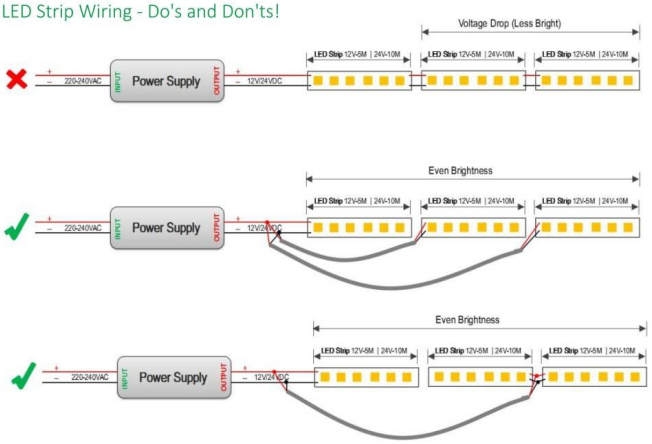
5. LED Strip Wiring - Do's and Don'ts!