

PILAR

Lavov Ceiling downlight from the family PILAR with a power of 35W and a 60 beam angle. Finished in Grey colour.Dimensions 113x113x120 mm.. With a total lumen output of 2800lm and a luminous efficiency of 80lm/W. CCT 3000K. Driver DALI. Made in Die Cast Aluminium Body, Front Cover Tempered Glass. .IP65.

Item code	**86.OC01.3333.03**
Product type	**Outdoor**
Category	**Surface Ceiling Downlight**
Family	**PILAR**
Pictograms	

Dimensions	
Product dimensions (mm)	**113x113x120 mm**

Scheme

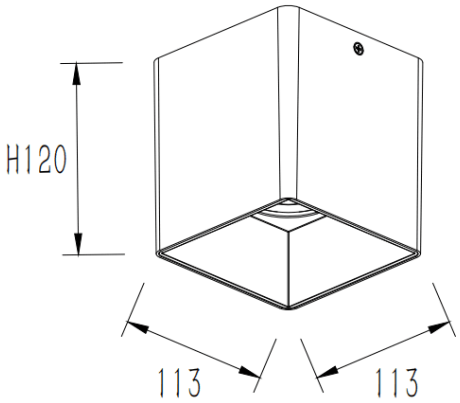

Product	
Real power (W)	**35**
Real luminous flux (Lm)	**2800**
Luminous efficiency (Lm/W)	**80**
Beam angle (º)	**60**
Life time (h)	**50000h L80B10**
IP	**IP65**
Colour	**Grey**
Control gear included	**Yes**
Control gear	**DALI**
Light source	**LED**
Type of LED	**COB**
Average life time (h)	**30**
Colour temperature (K)	**3000**
Colour consistency (SDCM)	**SDCM3**
CRI	**80**