**SURFACE CEILING DOWNLIGHT - SDOWN**

**Item code 86.OC02.1311.03**



## SDOWN

Lavov Ceiling downlight from the family SDOWN with a power of 10W and a 20 beam angle. Finished in Silver colour.Dimensions Ø75X100 mm .. With a total lumen output of 800lm and a luminous efficiency of 80lm/W. CCT 3000K. Driver ON-OFF. Made in Die Cast Aluminium Body, Front Cover Tempered Glass. .IP65.

| | |
|---|---|
| **Item code** | **86.OC02.1311.03** |
| **Product type** | **Outdoor** |
| **Category** | **Surface Ceiling Downlight** |
| **Family** | **SDOWN** |
| **Pictograms** | 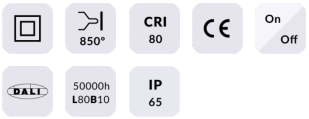 |

| **Dimensions** | |
|---|---|
| **Product dimensions (mm)** | **Ø75X100 mm** |

**Scheme**

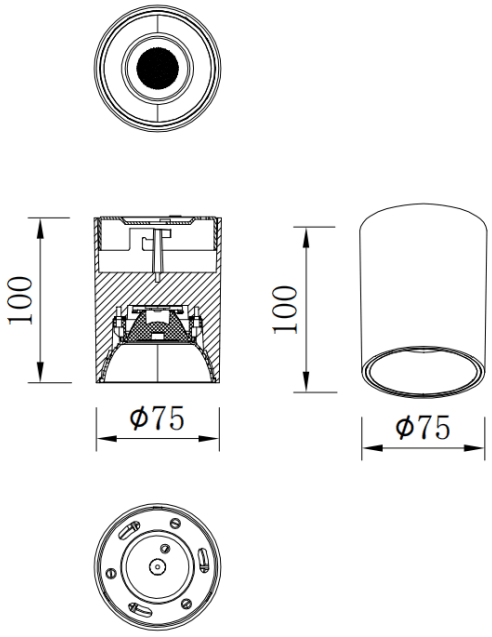


| **Product** | |
|---|---|
| **Real power (W)** | **10** |
| **Real luminous flux (Lm)** | **800** |
| **Luminous efficiency (Lm/W)** | **80** |
| **Beam angle (º)** | **20** |
| **Life time (h)** | **50000h L80B10** |
| **IP** | **IP65** |
| **Colour** | **Silver** |
| **Control gear included** | **Yes** |
| **Control gear** | **ON-OFF** |
| **Light source** | **LED** |
| **Type of LED** | **COB** |
| **Colour temperature (K)** | **3000** |
| **Colour consistency (SDCM)** | **SDCM3** |
| **CRI** | **80** |

## Photometry

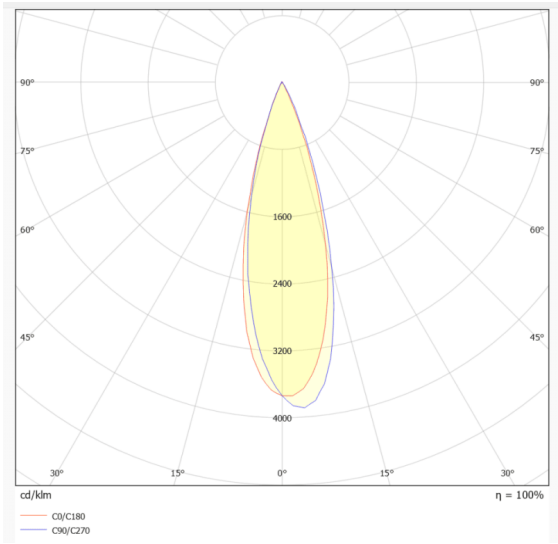
90°
75°
60°
45°
1600
2400
3200
4000
30°
15°
0°
cd/klm
η = 100%
C0/C180
C90/C270

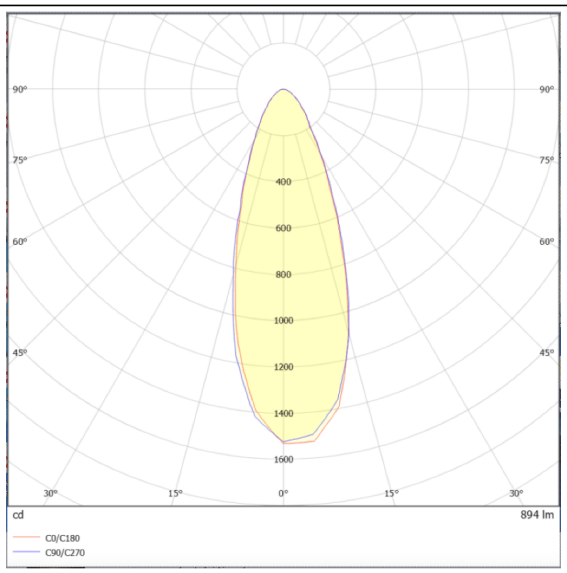
90°
75°
60°
45°
400
600
800
1000
1200
1400
1600
30°
15°
0°
cd
894 lm
C0/C180
C90/C270