SURFACE CEILING DOWNLIGHT - SDOWN

Item code 86.OC02.2331.03



SDOWN

Lavov Ceiling downlight from the family SDOWN with a power of 20W and a 60 beam angle. Finished in Silver colour.Dimensions Ø95X152 mm .. With a total lumen output of 1600lm and a luminous efficiency of 80lm/W. CCT 3000K. Driver ON-OFF. Made in Die Cast Aluminium Body, Front Cover Tempered Glass. .IP65.

Item code	**86.OC02.2331.03**
Product type	**Outdoor**
Category	**Surface Ceiling Downlight**
Family	**SDOWN**
Pictograms	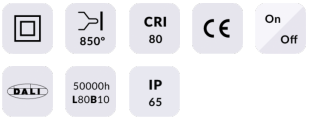

Dimensions	
Product dimensions (mm)	**Ø95X152 mm**

Scheme

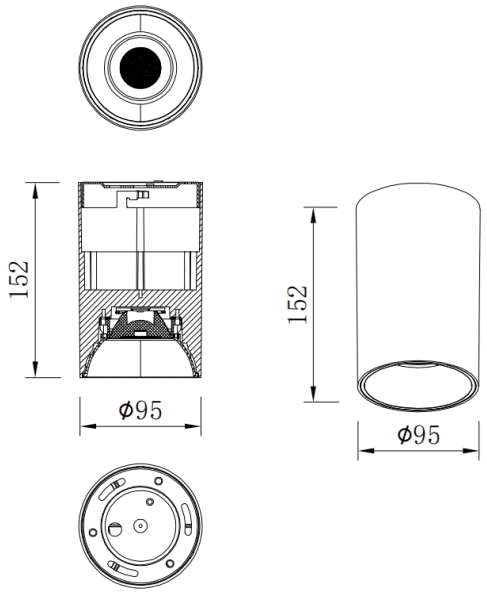

Product	
Real power (W)	**20**
Real luminous flux (Lm)	**1600**
Luminous efficiency (Lm/W)	**80**
Beam angle (º)	**60**
Life time (h)	**50000h L80B10**
IP	**IP65**
Colour	**Silver**
Control gear included	**Yes**
Control gear	**ON-OFF**
Light source	**LED**
Type of LED	**COB**
Colour temperature (K)	**3000**
Colour consistency (SDCM)	**SDCM3**
CRI	**80**

Photometry

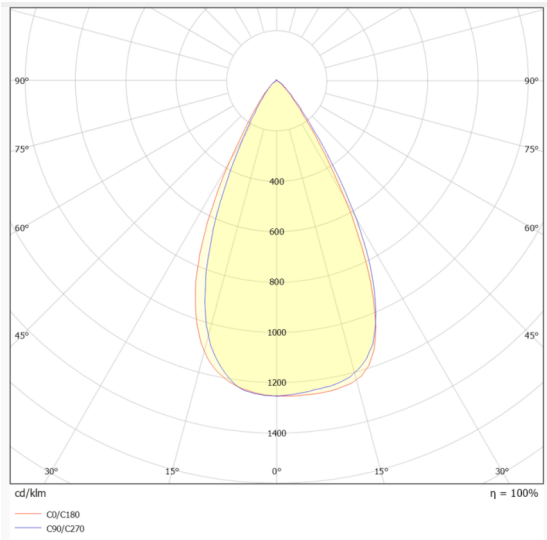
90°
75°
60°
45°
400
600
800
1000
1200
1400
30°
15°
0°
cd/klm
η = 100%
C0/C180
C90/C270

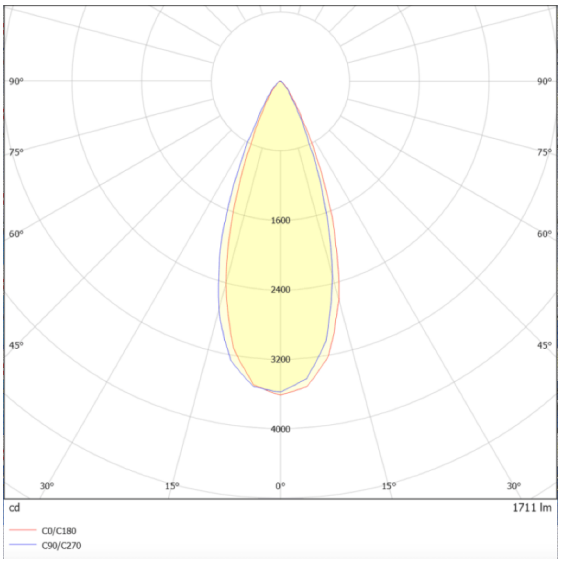
90°
75°
60°
45°
1600
2400
3200
4000
30°
15°
0°
cd
1711 lm
C0/C180
C90/C270