

## SDOWN

Lavov Ceiling downlight from the family SDOWN with a power of 30W and a 60 beam angle. Finished in Black colour.Dimensions Ø115X152 mm .. With a total lumen output of 2400lm and a luminous efficiency of 80lm/W. CCT 3000K. Driver DALI. Made in Die Cast Aluminium Body, Front Cover Tempered Glass. .IP65.

| | |
|---|---|
| **Item code** | **86.OC02.3333.02** |
| **Product type** | **Outdoor** |
| **Category** | **Surface Ceiling Downlight** |
| **Family** | **SDOWN** |
| **Pictograms** | 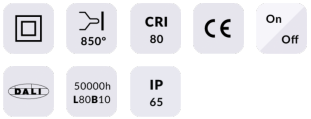 |

| **Dimensions** | |
|---|---|
| **Product dimensions (mm)** | **Ø115X152 mm** |

**Scheme**

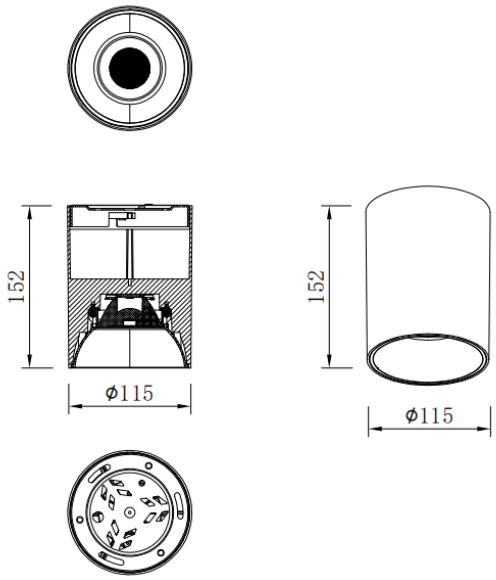


| **Product** | |
|---|---|
| **Real power (W)** | **30** |
| **Real luminous flux (Lm)** | **2400** |
| **Luminous efficiency (Lm/W)** | **80** |
| **Beam angle (º)** | **60** |
| **Life time (h)** | **50000h L80B10** |
| **IP** | **IP65** |
| **Colour** | **Black** |
| **Control gear included** | **Yes** |
| **Control gear** | **DALI** |
| **Light source** | **LED** |
| **Type of LED** | **COB** |
| **Colour temperature (K)** | **3000** |
| **Colour consistency (SDCM)** | **SDCM3** |
| **CRI** | **80** |