- **Installation and wiring of luminaire must be in accordance with all applicabie local codes.**
- **Installation,inspection,and maintenance of luminaires should be performed by a qualified electrician.**
- **DO NOT make or alter any open holes in the luminaire Do not modify the luminaire.**
- **DO NOT install damaged product.**
- **Make sure electrical power is OFF before and during installation and maintenance.**
- **Make sure the equipment is properly grounded.**
- **Make sure the supply voltage is same as the rated fixture voltage.**

# Installation Instruction

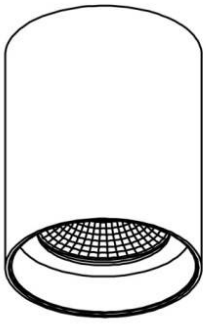

## CAUTIONS:

1.Switch-off the power supply before any installation and maintenance operations.
2.Installaion should be carried out by a suitably qualified person in accordance with good electrical practice and the appropriate national wiring regulations.
3.Connect this lighting according to voltage and frequencies mention on driver.

## INSTALLATION:

1 Make a hole

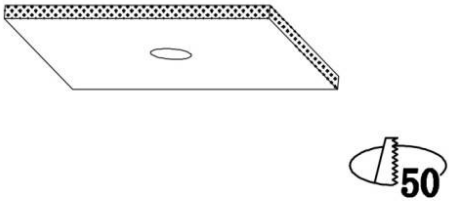


2

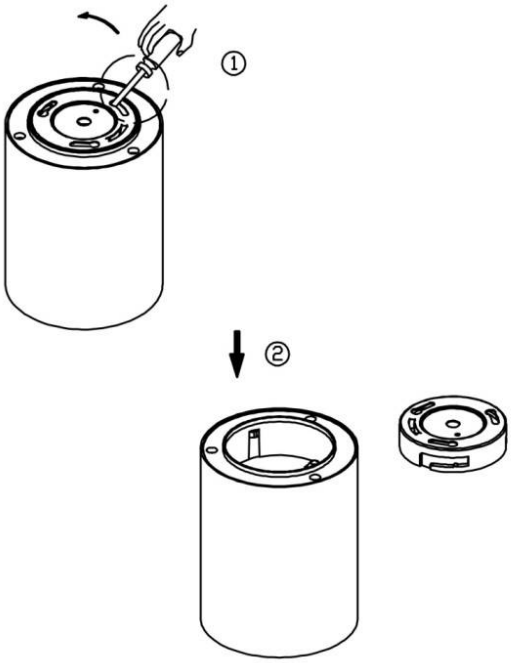


3

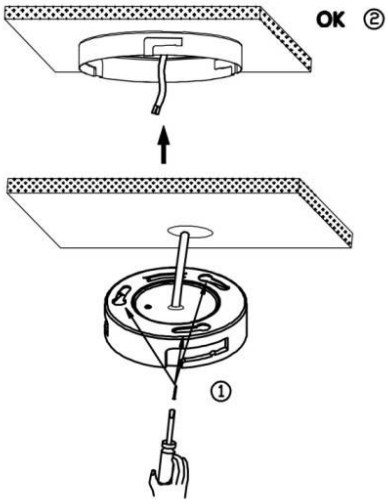


4

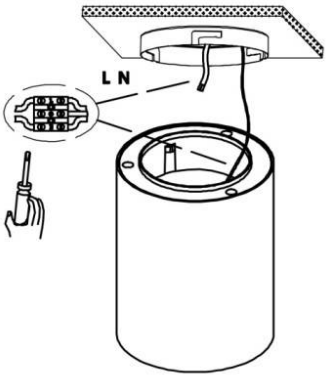

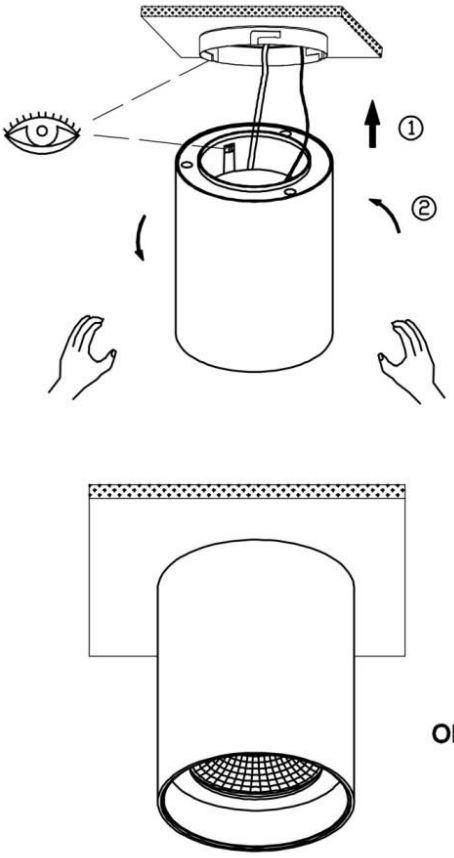
5