OUTDOOR / SURFACE CEILING DOWNLIGHT / SDOWN

Item code 86.OC02.5323.01

- **Installation and wiring of luminaire must be in accordance with all applicabie local codes.**
- **Installation,inspection,and maintenance of luminaires should be performed by a qualified electrician.**
- **DO NOT make or alter any open holes in the luminaire Do not modify the luminaire.**
- **DO NOT install damaged product.**
- **Make sure electrical power is OFF before and during installation and maintenance.**
- **Make sure the equipment is properly grounded.**
- **Make sure the supply voltage is same as the rated fixture voltage.**

Installation instructions

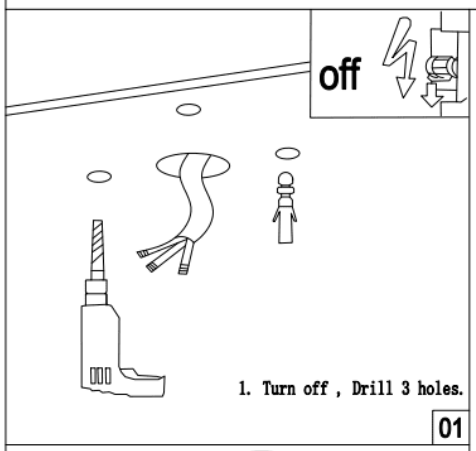

1. Turn off , Drill 3 holes.

01

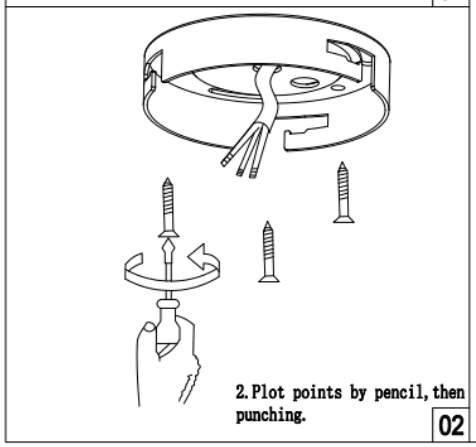

2. Plot points by pencil, then punching.

02

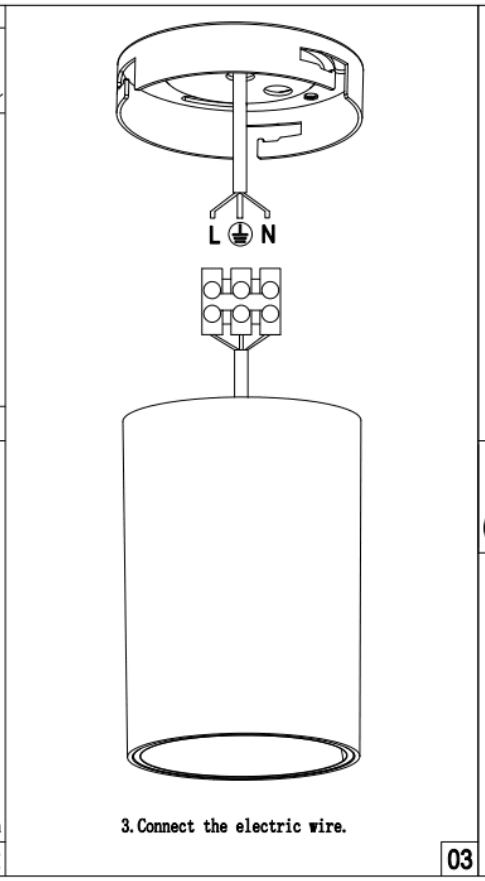

3. Connect the electric wire.

03

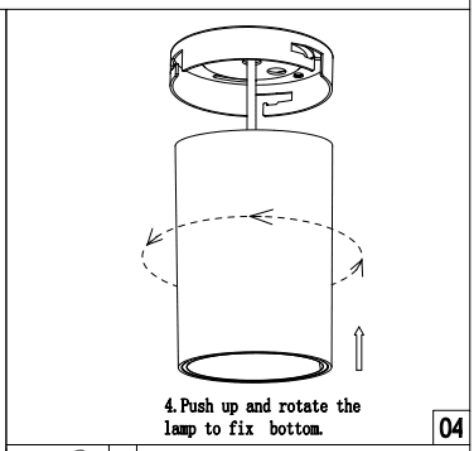

4. Push up and rotate the lamp to fix bottom.

04

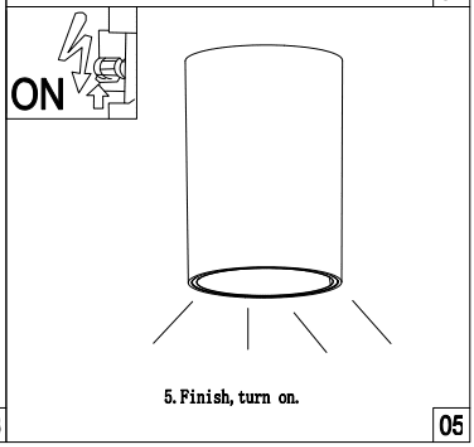

5. Finish, turn on.

05