

SDOWN

Lavov Ceiling downlight from the family SDOWN with a power of 60W and a 40 beam angle. Finished in White colour.Dimensions Ø205X212 mm .. With a total lumen output of 4800lm and a luminous efficiency of 80lm/W. CCT 3000K. Driver ON-OFF. Made in Die Cast Aluminium Body, Front Cover Tempered Glass. .IP65.

Item code	**86.OC02.6321.01**
Product type	**Outdoor**
Category	**Surface Ceiling Downlight**
Family	**SDOWN**
Pictograms	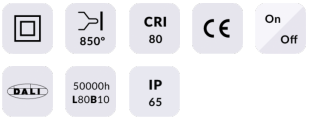

Dimensions	
Product dimensions (mm)	**Ø205X212 mm**

Scheme

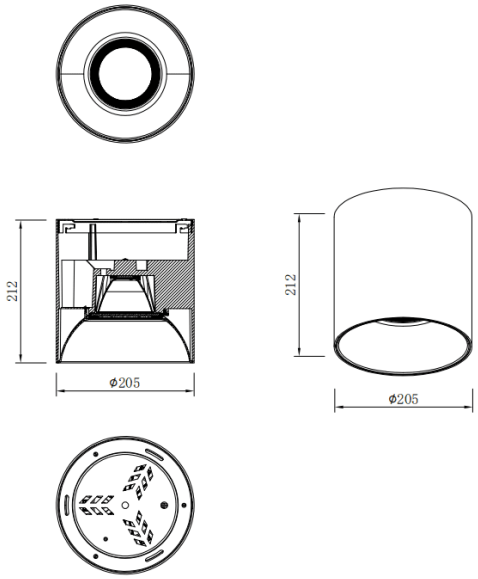

Product	
Real power (W)	**60**
Real luminous flux (Lm)	**4800**
Luminous efficiency (Lm/W)	**80**
Beam angle (º)	**40**
Life time (h)	**50000h L80B10**
IP	**IP65**
Colour	**White**
Control gear included	**Yes**
Control gear	**ON-OFF**
Light source	**LED**
Type of LED	**COB**
Colour temperature (K)	**3000**
Colour consistency (SDCM)	**SDCM3**
CRI	**80**