SAFE

Lavov outdoor floodlight from the family SAFE with a power of 200W and an optic of 26ºx60º. . With a totsl lumen output of 29000 lm and an efficiency of 145lm/W. Manufactured in die cast aluminium alloy with low cooper content perfect for agressive environements and finished in powder coating in black color. Degree of protection IP66 and IK08. DALI driver.

Item code	**86.OF03.5463.02**
Product type	**Indoor**
Category	**Industrial**
Family	**SAFE**
Pictograms	850° · IK 10 · Driver INCL. · IP 69 · CRI 70 · SDCM 5

Dimensions	
Product dimensions (mm)	**447x359x75mm**

Scheme

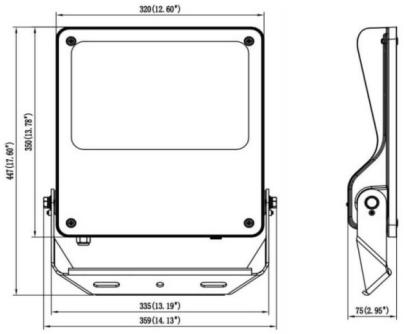

200W

Product	
Real power (W)	**200**
Real luminous flux (Lm)	**29000**
Luminous efficiency (Lm/W)	**145**
Beam angle (º)	**26ºx60º**
IP	**IP66**
Operating temperature	**-30°C to + 50°C**
Colour	**black**
Control gear included	**yes**
Control gear	**DALI**
Power Factor	**>0,99**
Flicker Free	**YES**
Light source	**LED**
Type of LED	**NF2W757GR-V3**
Average life time (h)	**Up to 100,000hrs LM88**
Colour temperature (K)	**4000K**
Colour consistency (SDCM)	**5**
CRI	**70**
IK	**IK08**