

Dot

Lavov Pixel light from the family DOT with a power of 1,44 W and RGB color. Beam angle 120 degrees. Made in die cast aluminium and PC cover. Driver not included. Controlled by DMX512 protocol. Milky dome.Not include driver.

Item code	**86.OP01.2000.02**
Product type	**Outdoor**
Category	**Pixel Light**
Family	**Dot**
Pictograms	

Scheme

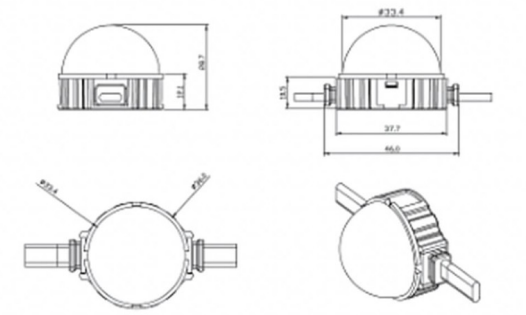

Product	
Real power (W)	**1.44**
Real luminous flux (Lm)	**25.83**
Beam angle (º)	**99.78**
IP	**66**
Colour	**black**
Control gear included	**NOT**
Light source	**LED**
Type of LED	**6 CREE SMD**
Average life time (h)	**80000h L70B10**
Colour temperature (K)	**RGB**
Colour consistency (SDCM)	**SDCM3**