## Dot

Lavov Pixel light from the family DOT with a power of 1,44 W and Single color. Beam angle 120 degrees. Made in die cast aluminium and PC cover. Driver not included. Controlled by DMX512 protocol. Milky dome.Not include driver.

| | |
|---|---|
| **Item code** | **86.OP01.2300.02** |
| **Product type** | **Outdoor** |
| **Category** | **Pixel Light** |
| **Family** | **Dot** |
| **Pictograms** | 850° CRI 80 SDCM 3 CE Driver EXCL. On Off IP 66 |

## Scheme

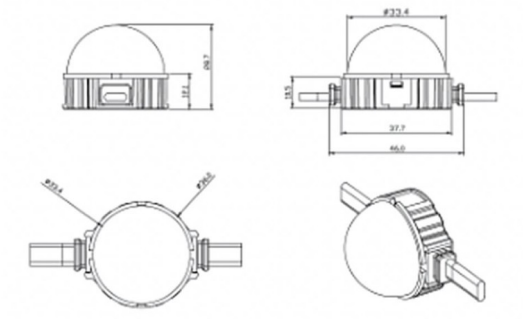

| | |
|---|---|
| **Product** | |
| **Real power (W)** | **1.44** |
| **Real luminous flux (Lm)** | **54.57** |
| **Beam angle (º)** | **107.68** |
| **IP** | **66** |
| **Colour** | **black** |
| **Control gear included** | **NOT** |
| **Light source** | **LED** |
| **Type of LED** | **6 CREE SMD** |
| **Average life time (h)** | **80000h L70B10** |
| **Colour temperature (K)** | **SINGLE COLOR** |
| **Colour consistency (SDCM)** | **SDCM3** |