OUTDOOR / SPIKE SPOT LIGHT / BEAM / BEAM MODULES

Item code 86.OS02.3031.03
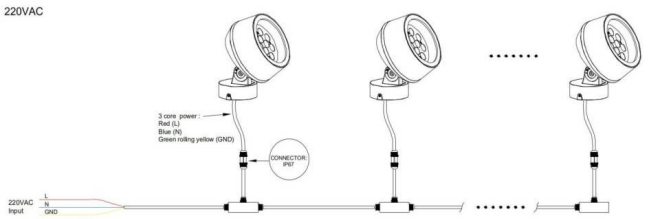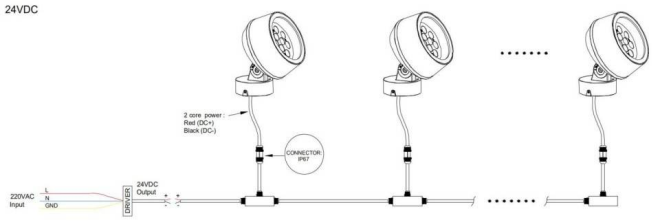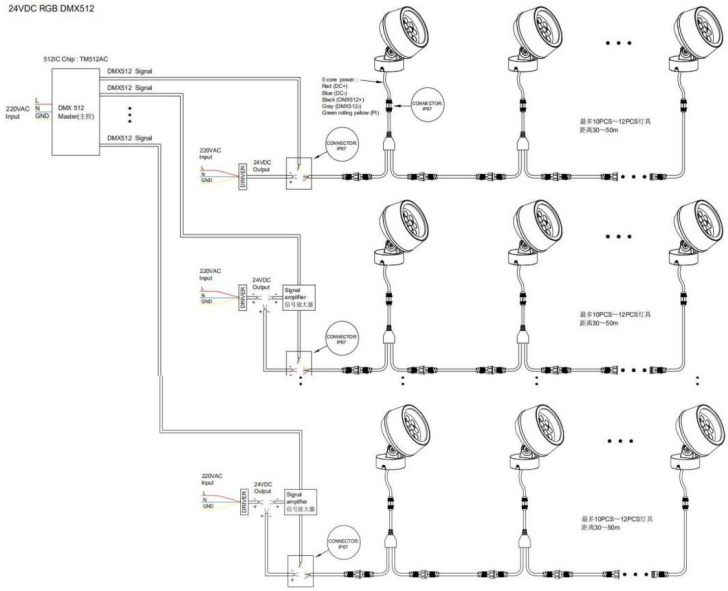
- **Installation and wiring of luminaire must be in accordance with all applicabie local codes.**
- **Installation,inspection,and maintenance of luminaires should be performed by a qualified electrician.**
- **DO NOT make or alter any open holes in the luminaire Do not modify the luminaire.**
- **DO NOT install damaged product.**
- **Make sure electrical power is OFF before and during installation and maintenance.**
- **Make sure the equipment is properly grounded.**
- **Make sure the supply voltage is same as the rated fixture voltage.**