LED PROFILES-LINEAR ALUMINUM CASE

AL6063-t5, profile surface corner square 15,5x15,5, max 18w/m.

3m set.

Item code	**86.P003.0003.03**
Product type	**Indoor**
Category	**LED Strips**
Family	**LED PROFILES-LINEAR ALUMINUM CASE**
Pictograms	

Dimensions	
Product dimensions (mm)	**3 Meter Set**
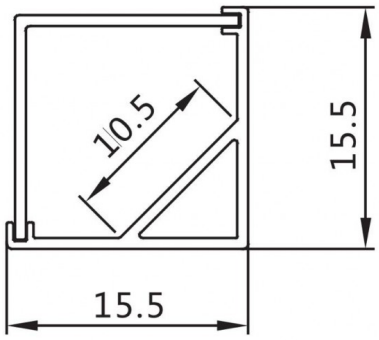
Scheme