ROUND PANEL

Lavov reecessed luminaire from the family ROUND PANEL with a power of 40W and a beam angle of 110 . UGR13. Finished in White colour. With a total lumen output of 4100lm and a luminous efficacy of 100lm/W. Made in Aluminum Frame + Steel body and PMMA diffuser. Driver On-Off. CCT 4000K. Dimensions ø600x20mm.

Item code	**86.R012.1401.01**
Product type	**Indoor**
Category	**Recessed Fixtures**
Family	**ROUND PANEL**
Pictograms	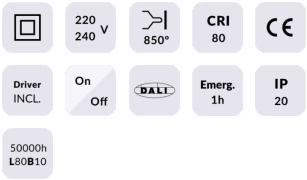

Dimensions	
Product dimensions (mm)	**ø600x20**

Scheme

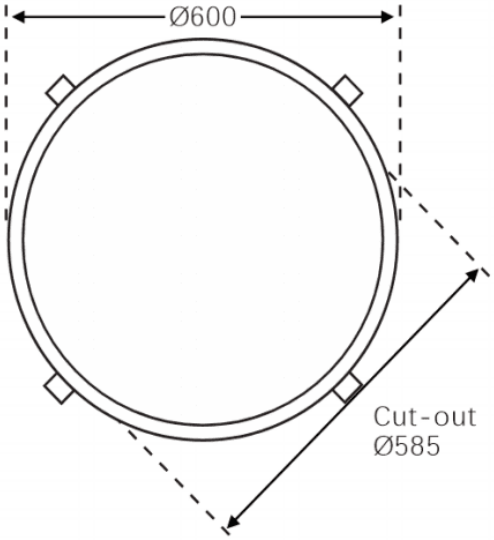

Photometry

Product	
Real power (W)	**40**
Real luminous flux (Lm)	**4100**
Luminous efficiency (Lm/W)	**100**
Beam angle (º)	**110**
Life time (h)	**50000h L80B10**
IP	**20**
Electrical class insulation	**II**
Colour	**White**
U. G. R	**13**
Control gear included	**Yes**
Control gear	**On-Off**
Light source	**LED**
Type of LED	**SMD**
Colour temperature (K)	**4000**
Colour consistency (SDCM)	**SDCM6**
CRI	**80**

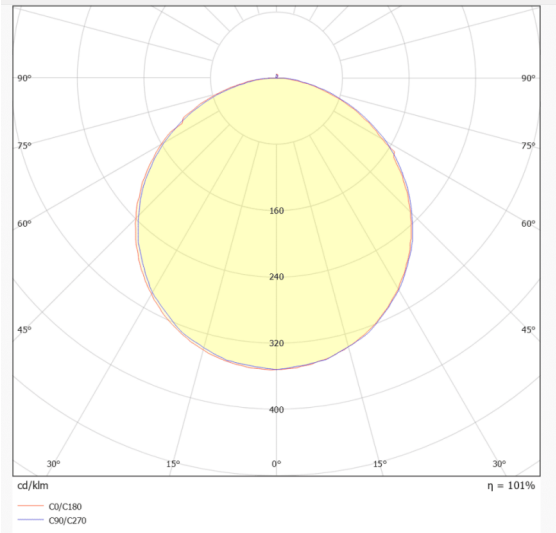
90°
90°
75°
75°
60°
60°
45°
45°
160
240
320
400
30°
15°
0°
15°
30°
cd/klm
η = 101%
C0/C180
C90/C270