Dimensions	
Product dimensions (mm)	**Ø75X100 mm**

Scheme

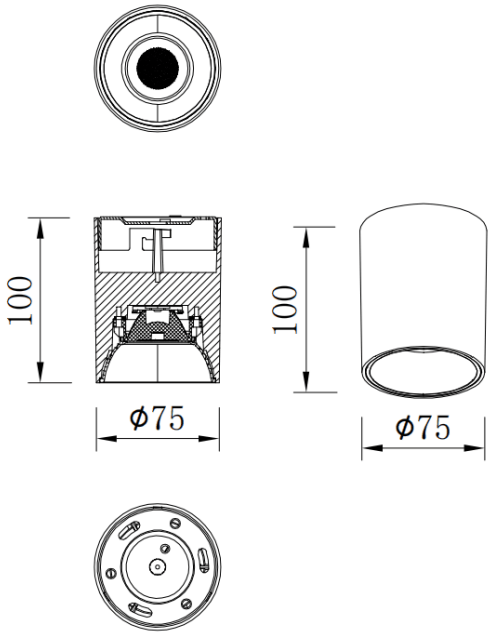

Photometry

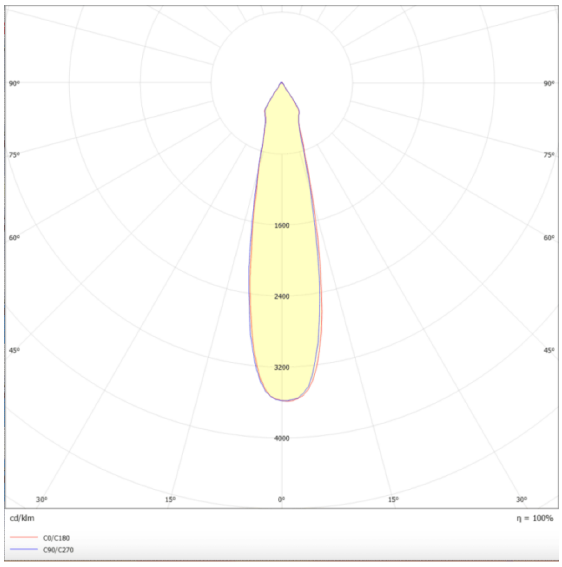

TUBULAR-S

Lavov surface downlight from the family with a power of 10W and a beam angle of 20º. Finished in White colour. Dimensions Ø75X100 mm .With a total lumen output of 800lm and a luminous efficacy of 80lm/W. Made in Die Cast Aluminum. Driver ON-OFF. CCT 4000K.

Item code	**86.SD01.1421.01**
Product type	**Indoor**
Category	**Surface Downlights**
Family	**TUBULAR-S**
Pictograms	220 240 V · 850° · CRI 80 · CE · On Off · DALI · IP 20 · 50000h L80B10

Product	
Real power (W)	**10**
Real luminous flux (Lm)	**800**
Luminous efficiency (Lm/W)	**80**
Beam angle (º)	**20**
Life time (h)	**50000h L80B10**
IP	**IP65**
Colour	**White**
Control gear included	**Yes**
Control gear	**ON-OFF**
Colour temperature (K)	**4000**
Colour consistency (SDCM)	**SDCM<3**
CRI	**80**