SQUARE-S

Lavov surface downlight from the family SQUARE-S B with a power of 45W and a beam angle of 20º. Finished in Grey colour. Dimensions 130x130x140mm.With a total lumen output of 3748.5lm and a luminous efficacy of 83.3lm/W. Made in Die cast aluminium. Driver ON-OFF. CCT 4000K. IP65.

Item code	**86.SD03.4411.03**
Product type	**Indoor**
Category	**Surface Downlights**
Family	**SQUARE-S**
Pictograms	220 240 V, 850°, CRI 80, SDCM 3, CE, On Off, IP 20, 50000h L80B10

Dimensions	
Product dimensions (mm)	**130x130x140mm**

Scheme

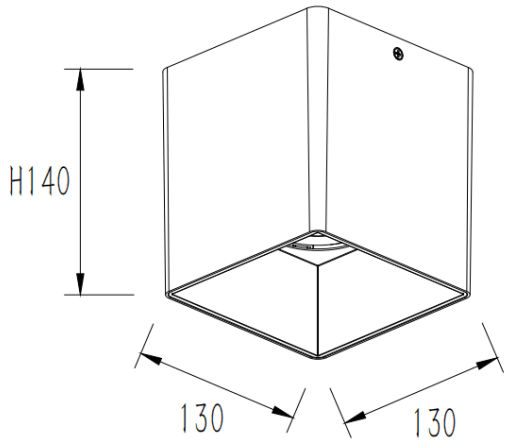

Product	
Real power (W)	**45**
Real luminous flux (Lm)	**3748.5**
Luminous efficiency (Lm/W)	**83.3**
Beam angle (º)	**20**
Life time (h)	**50000h L80B10**
IP	**IP65**
Colour	**Grey**
Control gear included	**Yes**
Control gear	**ON-OFF**
Colour temperature (K)	**4000**
Colour consistency (SDCM)	**SDCM<3**
CRI	**80**